KYOCERA

Operation Guide

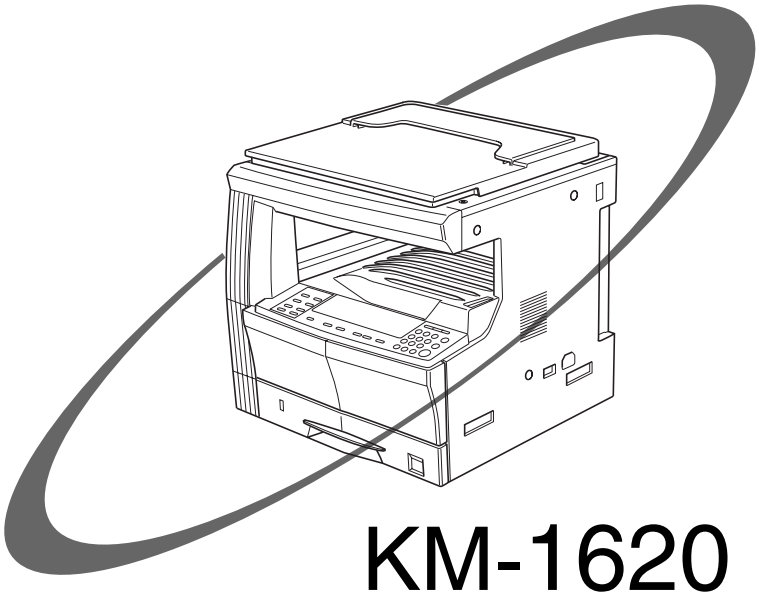

KM-1620
KM-2020

Please read the Operation Guide before using the copier.
Keep it close to the copier for easy reference.

In areas of the GEEA, the available setting for the Off Mode to engage is between 1 and 120 minutes, and the available setting for the Low Power Mode to engage is any 1 minute, 5 minutes, 15 minutes, 30 minutes, 45 minutes, 60 minutes, 90 minutes or 120 minutes.

This Operation Guide mentioned that the KM-1620 is a 16-sheet copier and the KM-2020 is a 20-sheet copier.

All rights reserved. No part of this material may be reproduced or transmitted in any form or by any means, electronic or mechanical, including photocopying, recording or by any information storage and retrieval system, without permission in writing from the Publisher.

Legal Restriction On Copying
• It may be prohibited to copy copyrighted material without permission of the copyright owner.
• It is prohibited under any circumstances to copy domestic or foreign currencies.
• Copying other items may be prohibited.

About this User's Manual

This User's Manual has been divided into a number of chapters in order to allow even first-time users of the copier to use the product efficiently and effectively. The content of these chapters is summarized below to be used as a reference when using this manual.

Section 1 IMPORTANT! PLEASE READ FIRST.
This chapter contains essential information for the purchaser of this copier. Precautions to be observed when installing and handling the copier as well as those necessary to its safe operation are described in this chapter.

Section 2 NAMES OF PARTS
The names of the various sections of the copier and operation panel as well as their operations are explained in this chapter.

Section 3 PREPARATIONS
Loading paper for use in the copier is also covered here.

Section 4 BASIC OPERATION
All steps leading up to making simple copies are explained in this chapter.

Section 5 COPY FUNCTIONS
Convenient copier functions that are useful are described within this chapter.

Section 6 COPIER MANAGEMENT
Changing the Default Settings, methods to adjust the copier to make it even easier to use and the procedures for Department Management settings are covered in this chapter.

Section 7 OPTIONAL EQUIPMENT
Convenient optional equipment that can be used with the copier is introduced in this chapter.

Section 8 TROUBLESHOOTING
This chapter outlines the troubleshooting procedures to deal with paper misfeeds and error displays.

Section 9 MAINTENANCE AND OPERATION INFORMATION
Maintenance of the copier, toner replacement and copier specifications are explained in this section.

Symbols

This manual uses symbols to indicate essential and supplementary items that must be observed.
The symbols and their meanings are as follows.

IMPORTANT!

Items which must be observed in order to prevent trouble and prohibited items are described.

Supplementary Information

Supplemental explanations and information that will serve as a reference are described.

CONTENTS

Energy Star Program v
Please read this Operation Guide before using the copier.
Keep it close to the copier for easy reference. vi

Section 1
IMPORTANT! PLEASE READ FIRST. .1-1

Caution Labels 1-1
INSTALLATION PRECAUTIONS 1-2
PRECAUTIONS FOR USE 1-3

Section 2
NAMES OF PARTS 2-1

Main Body 2-1
Operation Panel 2-3

Section 3
PREPARATIONS 3-1

Loading Paper 3-1
- Note when adding paper 3-1
- Loading into a Drawer 3-1
- Setting paper on the multi-bypass tray 3-4

Section 4
BASIC OPERATION 4-1

Basic Copying Procedure 4-1
Making enlarged and reduced copies 4-4
- Automatic Magnification Selection Mode 4-4
- Zoom Mode 4-4

Interrupt Copying 4-6
Low Power Mode 4-7
Auto Off Mode 4-8

Section 5
COPY FUNCTIONS 5-1

Making 2-Sided copies from various types of originals 5-1
- Making 2-Sided copies from a 2-Sided original 5-1
- Making 2-Sided copies from an open-faced (book, etc.) original 5-1
- Making 2-Sided copies from one-sided originals 5-2

Copying two-page originals onto separate sheets:
Page Separation/Split Copy Modes 5-4
- Page separation/Split copy from book originals 5-4
- Page separation/Split copy from 2-sided originals 5-4

Making a margin space on the copies 5-6
- Standard Margin 5-6

Making copies with clean edges 5-8
- Erasing blemishes from edges of copies (Sheet erase mode) 5-8
- Erasing blemishes from the edges and middle of copies made from books (Book erase mode) 5-8

Fitting the image of either two or four originals onto a single copy page 5-10
- 2 in 1 5-10
- 4 in 1 5-11

Automatic Sorting of copy sets 5-15
Saving on toner use 5-17
Memorizing frequently used settings: Program Function 5-18
- Registering a program 5-18
- Using programmed setting to make copies 5-18

Section 6
COPIER MANAGEMENT 6-1

Copy Management Mode 6-1
- Department Management Modes 6-1
- Department Management Code Operations Procedures 6-1
- Department Code Registration 6-2
- Deleting Department Codes 6-3
- Clearing the Department Management Count 6-4
- Outputting the Department Management List 6-5
- How to set the Department Management Mode 6-5
- Making copies when the copier is in the Department Management Mode 6-6

Default Setting Mode 6-7
- Default Settings Items 6-7
- Default Settings Mode Operations Procedures 6-11
- Procedure for Changing the Default Settings 6-11

Checking the Total Counter and Printing Out the Counter Report 6-34

Section 7
OPTIONAL EQUIPMENT 7-1

- Document Processor 7-1
- Paper Feeder 7-4
- Duplex Unit 7-4
- Key Counter 7-4
- Additional Memory 7-4

Section 8
TROUBLESHOOTING 8-1

If one of the following indications is Displayed 8-1
If paper jams 8-3
- Misfeed location indicators 8-3
- Cautions 8-3
- Removal Procedure 8-3

If other trouble occurs 8-8

Section 9
MAINTENANCE AND OPERATION INFORMATION 9-1

Cleaning the Copier 9-1
Replacing the Toner Container and Waste Toner Box 9-4
Specifications 9-7
- Main Body 9-7
- Document Processor (option) 9-8
- Paper Feeder (option) 9-8
- Duplex Unit (option) 9-8
- Additional Memory (option) 9-8

Environmental Specifications 9-9
Optional Equipment 9-10

Appendix: Functions and Settings Combination Chart 9-12

Making Full use of the copier's advanced functions

1 The copier will automatically select the paper that is the same size as the original
<Auto Paper Selection Mode>
(Refer to P.4-1)

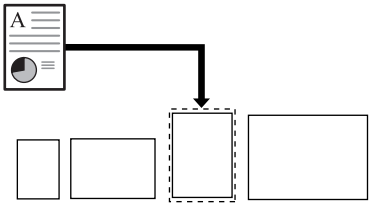

2 Making clear copies of photograph originals
<Image Quality Selection>
(Refer to P.4-2)

3 A variety of magnification/reduction methods

- Enlargement/Reduction for specified drawer sizes
  <Automatic Magnification Selection Mode>
  (Refer to P.4-4)

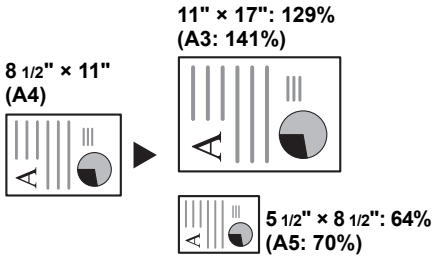

- Reduction/Enlargement in the range from 50 to 200%
  <Zoom Mode>
  (Refer to P.4-4)

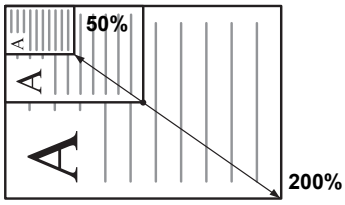

4 Making 2-Sided Copies from various types of originals
<2-Sided Copy Mode>
(Refer to P.5-1)

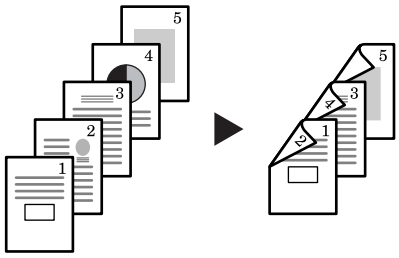

5 Copying each image of open-faced (book, etc.) or 2-Sided originals onto separate sheets
<Page separation/Split copy Mode>
(Refer to P.5-4)

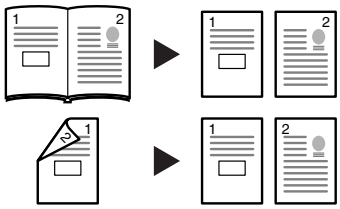

6 Shifting the image to create margins for copies
<Margin Mode>
(Refer to P.5-6)

7 The edges of the original can be lightened during copying to eliminate shading
<Border Erase Mode>
(Refer to P.5-8)

8 2 or 4-page originals can be combined onto a single sheet
<Combine/Merge Copy Mode>
(Refer to P.5-10)

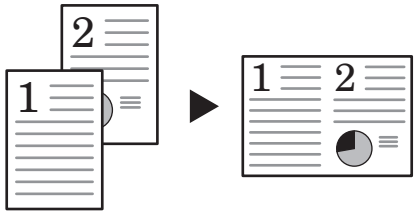

9 Automatic sorting can be performed
<Sort Mode>
(Refer to P.5-15)

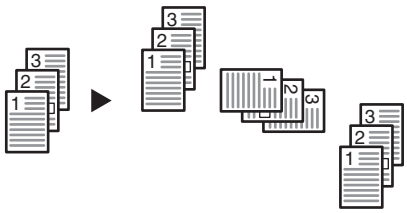

10 The amount of toner consumed can be reduced
<Eco-copy>
(Refer to P.5-17)

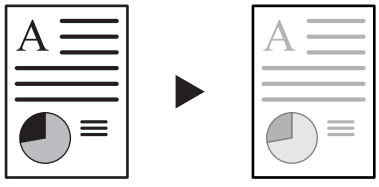

11 Memorizing frequently used settings
<Program Function>
(Refer to P.5-18)

12 Using department ID-Codes to manage the number of copies made by each department

<Copy Management Mode>
(Refer to P.6-1)

13 A full range of optional equipment is available

- Document Processor
(Refer to P.7-1)

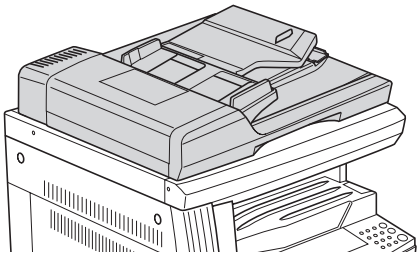

- Paper Feeder
(Refer to P.7-4)

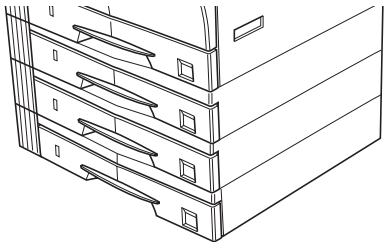

- Duplex Unit
(Refer to P.7-4)

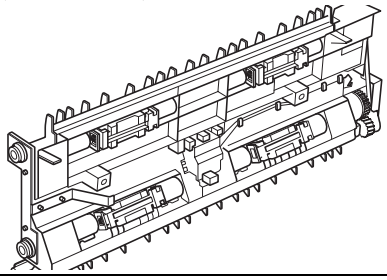

- Key Counter
(Refer to P.7-4)

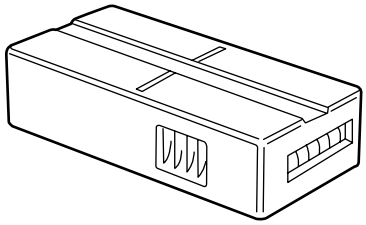

Our company is a participant in the International Energy Star Program and we have determined that this product is compliant with the standards set forth by the International Energy Star Program.

Energy Star Program

The International Energy Star Program is based on the promotion of the efficient use of energy while reducing the environmental pollution that accompanies energy consumption through the promotion of the manufacturing and sales of products that fulfill Program standards.
In the case of copiers, under the International Energy Star Program standards, they are required to automatically switch to a “Low Power Mode” after a set period of time has elapsed and to switch themselves off into an [Off Mode] after a set period of time in which they have not been used has passed.
This product has the following specifications designed to meet International Energy Star Program standards.

“Low Power Mode”

When 15 minutes have elapsed since the last usage, the machine is automatically switched into “Low Power Mode”. Note that the time before switching to “Low Power Mode” can be lengthened. Please refer to P.4-7 **"Low Power Mode"** and P.6-31 **"Low Power Mode Transition Time"** for details.

“Off Mode”

When 30 minutes have elapsed since the last usage, the machine is automatically switched into “Off Mode”. Note that the time before switching to “Off Mode” can be lengthened. Please refer to P.4-8 **"Auto Off Mode"** and P.6-31 **"Off Mode Transition Time"** for details.

2-Sided Copy Feature

The Energy Star Program recommends 2-Sided copying functions to help reduce the strain on environmental resources. Please consult with your dealer or sales representative for detailed information regarding the 2-Sided Copy feature.

Recycled Paper

The Energy Star Program recommends the use of recycled paper to reduce the burden on our environment. Please consult with your dealer or sales representative for information on recommended types of recycled paper, etc.

Please read this Operation Guide before using the copier. Keep it close to the copier for easy reference.

The sections of this guide and parts of the copier marked with symbols are safety warnings meant to protect the user, other individuals and surrounding objects, and ensure correct and safe usage of the copier. The symbols and their meanings are indicated below.

DANGER: Indicates that serious injury or even death will very possibly result from insufficient attention to or incorrect compliance with the related points.

WARNING: Indicates that serious injury or even death may result from insufficient attention to or incorrect compliance with the related points.

CAUTION: Indicates that personal injury or mechanical damage may result from insufficient attention to or incorrect compliance with the related points.

Symbols

The △ symbol indicates that the related section includes safety warnings. Specific points of attention are indicated inside the symbol.

.....[General warning]

.....[Warning of danger of electrical shock]

.....[Warning of high temperature]

The ⃠ symbol indicates that the related section includes information on prohibited actions. Specifics of the prohibited action are indicated inside the symbol.

.....[Warning of prohibited action]

.....[Disassembly prohibited]

The ● symbol indicates that the related section includes information on actions which must be performed. Specifics of the required action are indicated inside the symbol.

.....[Alert of required action]

.....[Remove the power plug from the outlet]

.....[Always connect the copier to an outlet with a ground connection]

Please contact your service representative to order a replacement if the safety warnings in this Operation Guide are illegible or if the guide itself is missing. (fee required)

Section 1 IMPORTANT! PLEASE READ FIRST.

Caution Labels

Labels related to safety have been attached to the product in the locations shown below. Please observe the warnings to prevent accidents such as burns and electrical shock while clearing paper misfeeds and adding toner.

Label2
High temperature inside this section. There is the risk of being burned so do not touch anything within.

Label3
High voltage generated in this section. There is a risk of getting shocked so do not touch anything in this section.

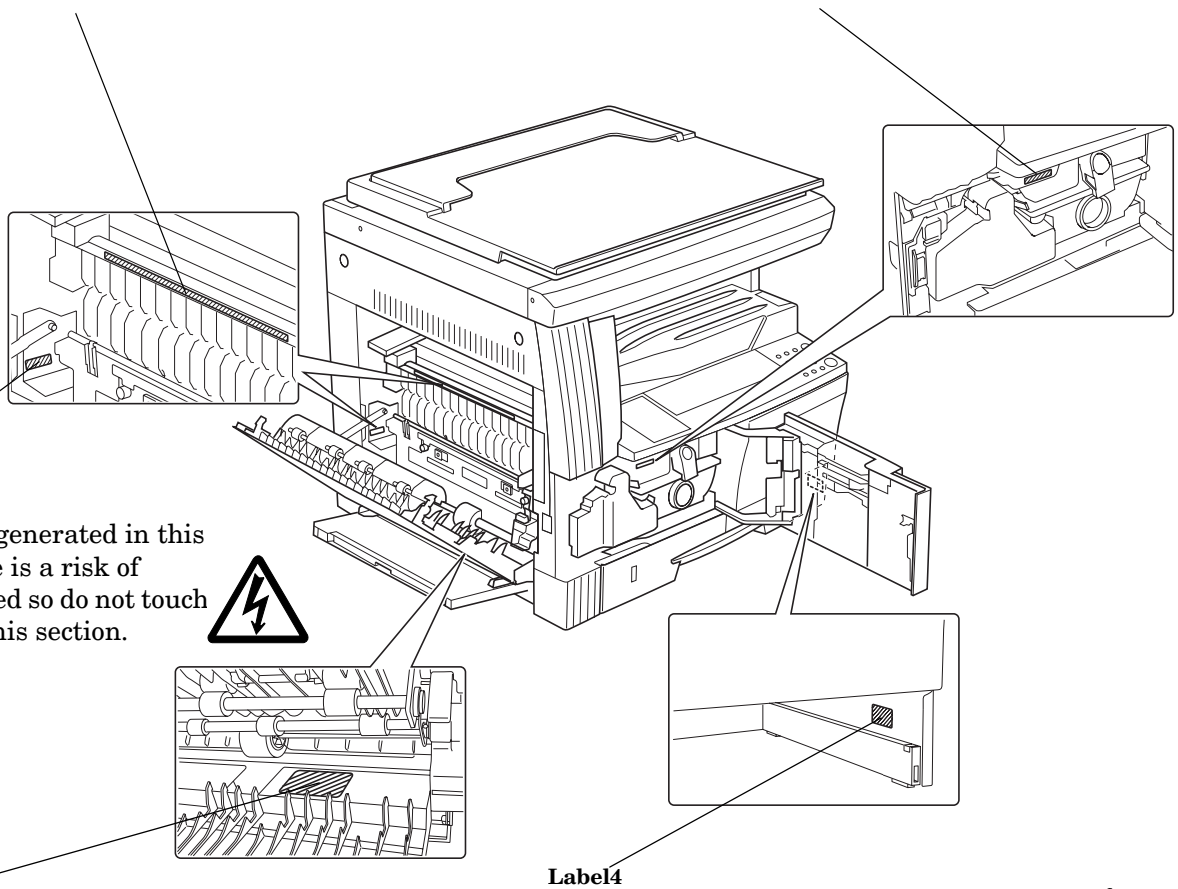

Label1
High voltage generated in this section. There is a risk of getting shocked so do not touch anything in this section.

Label5
Sections identified by this label operate at high temperatures. There is the risk of being burned so do not touch anything within.

Label4
High temperature in the upper part of this section. There is the risk of being burned so do not touch anything within.

Note: Do not remove any of these labels.

INSTALLATION PRECAUTIONS

Environment

CAUTION

Avoid placing the copier on or in locations which are unstable or not level. Such locations may cause the copier to fall down or fall over. This type of situation presents a danger of personal injury or damage to the copier. .....

Avoid locations with humidity or dust and dirt. If dust or dirt become attached to the power plug, clean the plug to avoid the danger of fire or electrical shock. .....

Avoid locations near radiators, heaters, or other heat sources, or locations near flammable items, to avoid the danger of fire.

To keep the copier cool and facilitate changing of parts and maintenance, allow access space as shown below. Leave adequate space, especially around the left and right sides, to allow air to be properly ventilated out of the copier.....

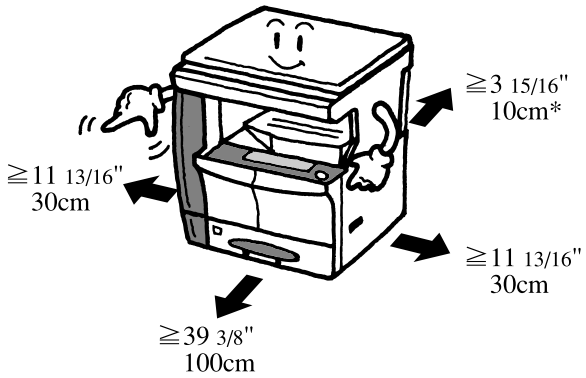

* Additional space will be required when the Document Processor is to be installed.

Other precautions

Adverse environmental conditions may affect the safe operation and performance of the copier. Install in an air-conditioned room (recommended room temperature: around 73.4ºF (23ºC), humidity: around 50%) and avoid the following locations when selecting a site for the copier.

- Avoid locations near a window or with exposure to direct sunlight.
- Avoid locations with vibrations.
- Avoid locations with drastic temperature fluctuations.
- Avoid locations with direct exposure to hot or cold air.
- Avoid poorly ventilated locations.

If the floor is delicate, when this product is moved after installation, the floor material may be damaged.

During copying, some ozone is released, but the amount will not cause any ill effect to one's health. If, however, the copier is used over a long period of time in a poorly ventilated room or when making an extremely large number of copies, the smell may become unpleasant. To maintain the appropriate environment for copy work, it is suggested that the room be properly ventilated.

Power supply/Grounding the copier

WARNING

DO NOT use a power supply with a voltage other than that specified. Avoid multiple connections in the same outlet. These types of situations present a danger of fire or electrical shock. .....

Plug the power cord securely into the outlet. If metallic objects come in contact with the prongs on the plug, it may cause a fire or electric shock. .....

Always connect the copier to an outlet with a ground connection to avoid the danger of fire or electrical shock in case of an electric short. If an earth connection is not possible, contact your service representative.....

Other precautions

Connect the power plug to the outlet closest to the copier.

The power supply cord is used as the main disconnect device. Ensure that the socket/outlet is located/installed near the equipment and is easily accessible.

Handling of plastic bags

WARNING

Keep the plastic bags that are used with the copier away from children. The plastic may cling to their nose and mouth causing suffocation.....

PRECAUTIONS FOR USE

Cautions when using the copier

WARNING

DO NOT place metallic objects or containers with water (flower vases, flower pots, cups, etc.) on or near the copier. This type of situation presents a danger of fire or electrical shock should they fall inside.....

DO NOT remove any of the covers from the copier as there is a danger of electrical shock from high voltage parts inside the copier.....

DO NOT damage, break or attempt to repair the power cord. DO NOT place heavy objects on the cord, pull it, bend it unnecessarily or cause any other type of damage. These types of situations present a danger of fire or electrical shock.....

NEVER attempt to repair or disassemble the copier or its parts as there is a danger of fire, electrical shock or damage to the laser. If the laser beam escapes, there is a danger of it causing blindness.....

If the copier becomes excessively hot, smoke appears from the copier, there is an odd smell, or any other abnormal situation occurs, there is a danger of fire or electrical shock. Turn the power switch OFF (○) immediately, REMOVE THE POWER PLUG from the outlet and then contact your service representative. .....

If anything harmful (paper clips, water, other fluids, etc.) falls into the copier, turn the power switch OFF (○) immediately. Next, BE ABSOLUTELY CERTAIN to remove the power plug from the outlet to avoid the danger of fire or electrical shock. Then contact your service representative. ....

DO NOT remove or connect the power plug with wet hands, as there is a danger of electrical shock.....

ALWAYS contact your service representative for maintenance or repair of internal parts. .

CAUTION

DO NOT pull the power cord when removing it from the outlet. Pulling on the power cord may break the wires and start a fire or cause an electrical shock. (ALWAYS grasp the power plug when removing the power cord from the outlet.).....

ALWAYS remove the power plug from the outlet when moving the copier. If the power cord is damaged, there is a danger of fire or electrical shock. .....

If the copier will not be used for a short period of time (overnight, etc.), turn the power switch OFF (○).
If it will not be used for an extended period of time (vacations, etc.), remove the power plug from the outlet for safety purposes during the time the copier is not in use. .....

HOLD the designated parts only when lifting or moving the copier.....

For safety purposes, always REMOVE the power plug from the outlet when performing cleaning operations. .....

If dust accumulates within the copier, there is a danger of fire or other trouble. It is therefore recommended that you consult with your service representative in regard to cleaning of internal parts. This is particularly effective if accomplished prior to seasons of high humidity. Consult with your service representative in regard to the cost of cleaning the internal parts of the copier.....

DO NOT leave the Document Processor open as there is a danger of personal injury.....

Other precautions

DO NOT place heavy objects on the copier or cause other damage to the copier.

DO NOT open the front cover, turn off the power switch, or pull out the power plug during copying.

When lifting or moving the copier, contact your service representative.

Do not touch electrical parts, such as connectors or printed circuit boards. They could be damaged by static electricity.

DO NOT attempt to perform any operations not explained in this handbook.

CAUTION: Use of controls or adjustments or performance of procedures other than those specified herein may result in hazardous radiation exposure.

Do not look directly at the light from the scanning lamp. Doing so may cause pain in the eyes or eyestrain.

Cautions when handling consumables

⚠ CAUTION

DO NOT attempt to incinerate the toner containers or the waste toner box. Dangerous sparks may cause burns.....

Keep the toner containers and the waste toner box out of the reach of children.....

If toner happens to spill from the toner container or the waste toner box, avoid inhalation or ingestion, as well as contact with your eyes and skin. .....

- If you do happen to inhale toner, move to a place with fresh air and gargle thoroughly with a large amount of water. If coughing develops, contact a physician.
- If you do happen to ingest toner, rinse your mouth out with water and drink 1 or 2 cups of water to dilute the contents of your stomach. If necessary, contact a physician.
- If you do happen to get toner in your eyes, flush them thoroughly with water. If there is any remaining tenderness, contact a physician.
- If toner does happen to get on your skin, wash with soap and water.

DO NOT attempt to force open or destroy the toner containers or the waste toner box.....

Other precautions

After use, ALWAYS dispose of the toner containers and the waste toner box in accordance with Federal, State and Local rules and regulations.

Store all consumables in a cool, dark location.

If you will not be using the copier for a prolonged period of time, remove all paper from the drawer(s) and the multi-bypass tray and seal in its original packaging.

Laser Safety

Laser radiation can be hazardous to the human body. For this reason, laser radiation emitted inside this machine is hermetically sealed within the protective housing and external cover. In the normal operation of the product by user, no radiation can leak from the machine.

This machine is classified as a Class 1 laser product under IEC 60825.

CAUTION

Performance of procedures other than those specified in this manual may result in hazardous radiation exposure.

This label is attached to the laser scanner unit inside the machine and is not in a user access area.

The label shown below is attached on the right side of the machine.

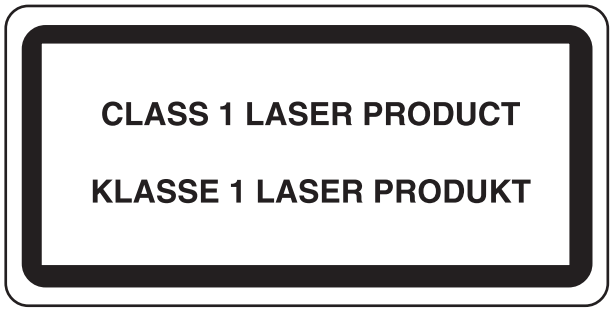

CAUTION!

The power plug is the main disconnect device! Other switches on the equipment are only functional switches and are not suitable for disconnecting the equipment from the power source.

VORSICHT!

Der Netzstecker ist die Hauptisoliervorrichtung! Die anderen Schalter auf dem Gerat sind nur Funktionsschalter und konnen nicht verwendet werden, um den Stromflus im Gerat zu unterbrechen.

CE

DECLARATION OF CONFORMITY TO 89/336/EEC, 73/23/EEC and 93/68/EEC

We declare under our sole responsibility that the product to which this declaration relates is in conformity with the following specifications.

Limits and methods of measurement for immunity characteristics of information technology equipment	**EN55024**
Limits and methods of measurement for radio interference characteristics of information technology equipment	**EN55022 Class B**
Limits for harmonic currents emissions for equipment input current ≦ 16A per phase	**EN61000-3-2**
Limitation of voltage fluctuations and flicker in low-voltage supply systems for equipment with rated current ≦ 16A	**EN61000-3-3**
Safety of information technology equipment, including electrical equipment	**EN60950**
Radiation Safety of laser products, equipment classification, requirements and user's guide	**EN60825-1**

Section 2 NAMES OF PARTS

Main Body

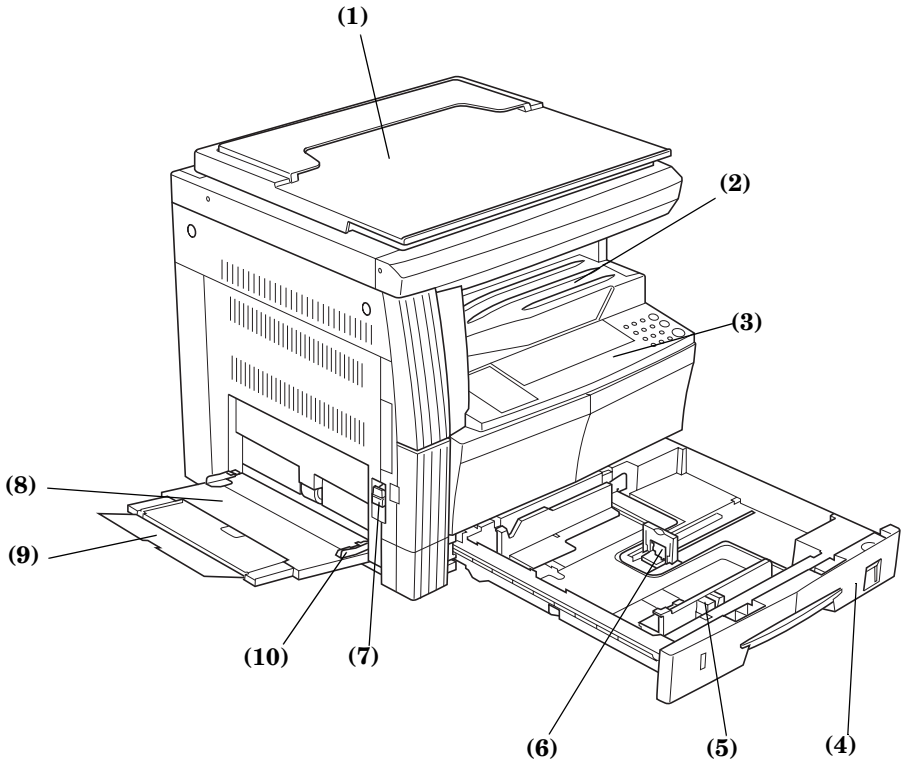

(1) Original Cover
Open/Close this to set the copy original on the glass platen.

(2) Copy Store Section
Finished copies will be accumulated here. Up to 250 (80 g/m^2) sheets of standard paper can be accumulated here.

(3) Operation Panel
Contains the keys and indicators for operating the copier.

(4) Drawer
Holds up to 300 sheets (80 g/m^2) of standard copy paper.

(5) Paper Width Guides
Grasp the guides to adjust them to the width of the paper.

(6) Paper Stopper
Grasp the guides and adjust them to the length of the paper.

(7) Left Cover Handle
Lift up this handle to open the left cover.

(8) Multi-bypass tray
Load paper here when copying onto small-size or special paper.

(9) Multi-bypass extension
Pull this out when setting paper sizes larger than 8 1/2" × 11"/A4R on the multi-bypass tray.

(10) Insert Guides
Adjust this to the paper width for multi-bypass tray operation.

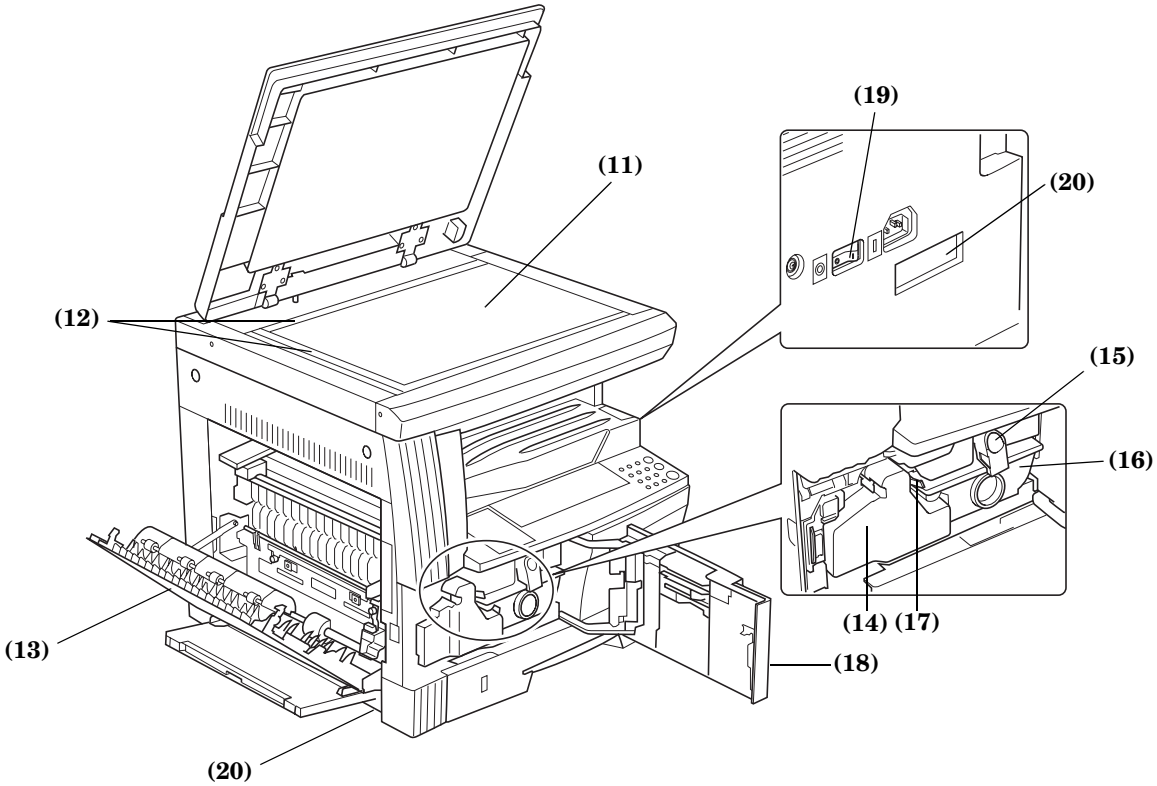

(11) Platen
Set the original here. Place the copy original face down and align it so that it is flush against the left rear corner of the platen.

(12) Original Size Indicator Plate
Be sure to align the original flush with this plate when setting it.

(13) Left Cover
Open this when a copy jam occurs.

(14) Waste Toner Box

(15) Toner Container Release Lever
Use this when replacing the toner container.

(16) Toner Container

(17) Cleaning shaft
Pull this out and then press it back in after replacing the toner container or when blemishes appear on copies.

(18) Front Cover
Open this when cleaning or replacing the toner container or waste toner box.

(19) Power Switch
Turn this switch ON (|) before beginning copying operations.

(20) Handles for transport
Grasp the 4 depressions on the left and right to move the copier.

Operation Panel

Inch specifications

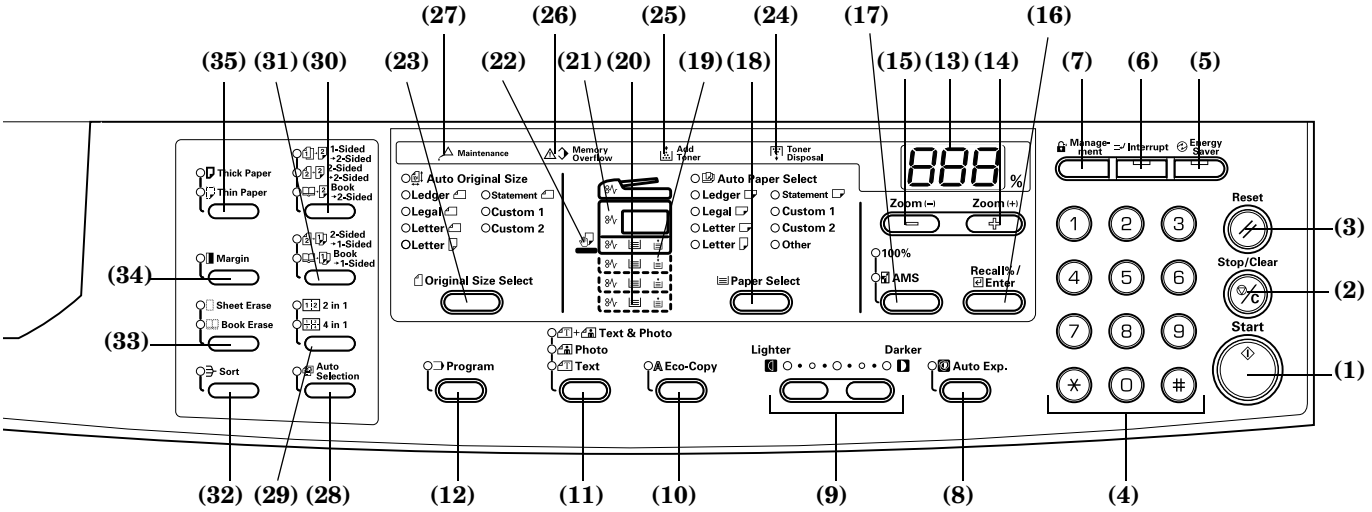

(1) [Start] Key (Indicator)
Press this to begin copying. When this indicator is pressed after it has changed to a green color, copying will begin immediately.

(2) [Stop/Clear] Key
Interrupts/Stops copying. Pressing on this key for 3 seconds will display the Total Count. Refer to P.6-34.

(3) [Reset] Key
Press this key to reset all functions and return to the Default Setting Mode. (Refer to P.2-4 **"Regarding the Default Setting Mode (the mode after warm-up processing has been completed or the [Reset] key pressed)"**.)

(4) Keypad
Press this key to set the number of copies to be produced or to enter numbers.

(5) [Energy Saver] Key (Indicator)
Press this key to enter the Low Power Mode. The "Conserve Power" indicator will be lit while in either the Low Power or OFF Mode. Press the key once to exit the OFF Mode. (Refer to P.4-7.)

(6) [Interrupt] Key (Indicator)
Press this when an interrupt copy operation is to be carried out. The Interrupt indicator will light up. (Refer to P.4-6.)

(7) [Management] Key
When in Department Management Mode, press this key after the copy operation has finished. This will display the Department Code Input screen. (Refer to P.6-6.)

(8) [Auto Exposure] Key
Press this key to enter the Auto Exposure Mode. This will detect the correct exposure for the original and set the optimal exposure for copying it. (Refer to P.4-2.)

(9) Exposure Adjustment Key/Exposure Display
Press this to adjust the exposure. The Exposure Display shows the current exposure for copying. (Refer to P.4-2.) Press the key for 3 seconds to enter the Default Settings Mode.

(10) [Eco-copy] Key
Press this to make copies using a reduced amount of toner. (Refer to P.5-17.)

(11) Image Quality Selection Key
Press this in order to select the image quality to match the type of original to be copied. (Refer to P.4-2.)

(12) [Program] Key
Press this to use a stored program for the copying operation. The indicator will light up when in Program Mode. (Refer to P.5-18.)

(13) No. of Copies/Zoom Display
This displays the number of copies. When the Zoom magnification is displayed the % symbol will be lit.

(14) Zoom (+) Key
Press this in order to increase the magnification for the copy. When in Default Settings Mode, this is used to select setting items.

(15) Zoom (–) Key
Press this in order to reduce the Zoom magnification for the copy. When in Default Settings Mode, this is used to select setting items.

(16) [Recall%/Enter] Key
When this is pressed while the No. of Copies is displayed, the Zoom percentage will be displayed. When in the Default Settings Mode, press this to confirm the items that have been set.

(17) Zoom Selection Key
Press this to switch between 1:1 (100%) and Automatic Sizing selection. (Refer to P.4-4.)

(18) [Paper Select] Key
Press this to select the paper size. The paper size can be selected by changing the drawer (paper supply level). The currently selected paper size will be lit. (Refer to P.4-1.) Pressing on this key for 3 seconds will display the drawer paper size selected in the Default Settings Mode. (Refer to P.3-3.)

(19) Paper Supply Indicator
This will turn to red when there is no paper in the drawer (paper supply level).

(20) Paper Supply Level Indicator
The indicator for the paper supply drawer (supply level) selected will be lit green.

(21) Paper Misfeed Indicator
The location of the paper misfeed will be lit red when a paper misfeed occurs. (Refer to P.8-3.)

(22) Multi-bypass Indicator
This will be lit green while Multi-bypass is selected.

(23) [Original Size Select] Key
Press this to select the size of the original.

Metric specifications

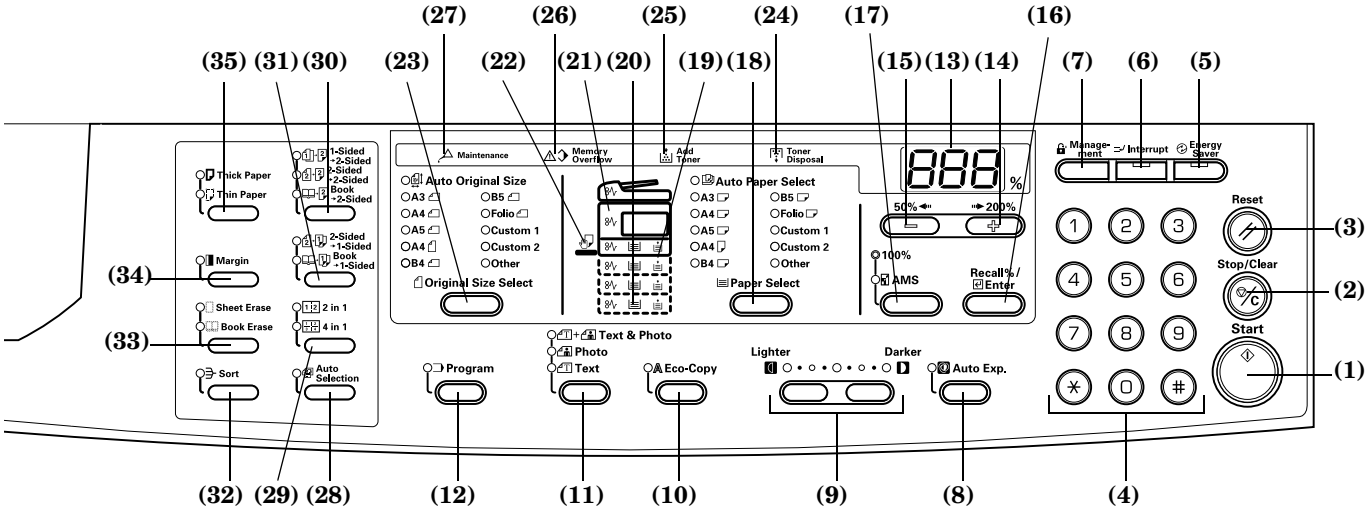

(24) Toner Disposal Indicator
This will be lit red when the Waste Toner Box is full.

(25) Add Toner Indicator
This will blink red when only a little toner is left. It will stay lit when no further copies can be produced.

(26) Memory Overflow Indicator
This will be lit red when the amount of available memory is exceeded during memory copy mode.

(27) Maintenance Indicator
This will flash red when the time for a maintenance inspection draws near. In addition, it will be lit red when it is time for a maintenance inspection.

(28) [Auto Selection] Key
Press this when making copies of originals of different sizes. The Mixed Original Sizes Indicator will light up. This can be used when the optional Document Processor is installed. (Refer to P.7-3.)

(29) Combine/Merge Copy Key
Press this when Combine/Merge copies (2 in 1 or 4 in 1) are to be made. (Refer to P.5-10.) Pressing this for 3 seconds will display the Default Setting Mode's Combine/Merge Copy item. (Refer to P.5-13.)

(30) 2-Sided Copy Key
Press this to match the original type when making copies of both sides. (Refer to P.5-1.) Pressing this for 3 seconds will display the Default Setting Mode's 2-Sided Copy item. (Refer to P.5-3.)

(31) Split Copy Key
Press this to match the original type when making split copies. (Refer to P.5-4.)

(32) [Sort] Key
Press this when copies are to be sorted. (Refer to P.5-15.)

(33) Border Erase Key
Press this to match the original type when making copies in which the borders are to be lightened. (Refer to P.5-8.) Pressing this for 3 seconds will display the Default Setting Mode's Border Width item. (Refer to P.5-8.)

(34) [Margin] Key
Press this to shift the image to create a margin. (Refer to P.5-6.) Pressing this for 3 seconds will display the Default Setting Mode's Margin Width item. (Refer to P.5-6.)

(35) Paper Type Selection Key
Select the paper type when thick or thin paper, etc. are to be copied.

Regarding the Default Setting Mode (the mode after warm-up processing has been completed or the [Reset] key pressed)

The copier has been set at the factory to automatically select a magnification ratio of 1:1 for the same size of paper as the original in the [Auto Paper Select] Mode with the No. of Copies at "1" and [Text & Photos Mode] for the Image Quality.

Notes
- The Default Setting Mode can be changed in the Default Settings.
- In the case where an optional drawer is present, the drawer selected in the Default Setting Mode can be changed. (Refer to P.6-20 **"Selected Drawer "**.)
- The Image Quality Mode selected in the Default Setting Mode can be changed. (Refer to P.6-12 **"Original Image Quality "**.)
- The Default Setting for the copy Exposure Adjustment can be changed to the [Auto Exposure Mode]. (Refer to P.6-13 **"Exposure Mode "**.)

Regarding the Auto-clear function

After the copy has been produced and a fixed interval (10 - 270 seconds) has elapsed, the copier will automatically revert to the state it was in when warm-up processing was completed.(However, the copy Exposure Mode and the Image Quality will not revert back to their original state. Copies can still be repeatedly produced with the same Copy Mode, No. of Copies, copy Exposure and other settings if the Auto-clear function has not been activated.

Note
Please refer to P.6-30 **"Auto Clear Time "** Turning OFF the Auto-clear Function P.6-29 **"Auto Clear Setting "** for information on changing the time interval before the Auto-clear function activates.

Custom Sizes

Paper and original sizes that are not displayed on the Operation Panel can be registered as Custom Sizes. (Refer to P.3-6.)

Regarding the Automatic Drawer Switching Function

When multiple drawers containing the same paper size have been set, in the event the drawer supplying the paper becomes empty during copying, the paper feeding will be automatically be switched to another drawer.

Notes

- An optional drawer is required to do this.
- The Automatic Drawer Changing Function can also be turned off if not needed. (Refer to P.6-20 **"Auto Drawer Switching "**.)
- The paper has to be oriented in the same direction.

Section 3 PREPARATIONS

Loading Paper

Paper can be loaded into the copier via the drawer or multi-bypass tray.

Note when adding paper

Fan through the stack of paper a few times after taking it out of its package before loading it into the drawer or multi-bypass tray.

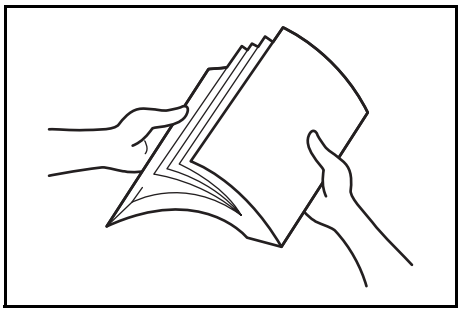

Set the paper in the drawer with the side which faced the top of its packaging facing up.

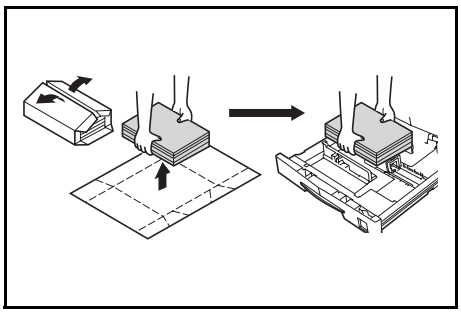

IMPORTANT!

- When using paper that has been run through a copier before, check it to make sure that all staples and paper clips have been removed. Attempting to copy paper that has fasteners attached may result in poor images or malfunctions.
- Straighten out any creases or curls in the paper before loading it into the drawer. Failure to straighten out creases and curls may lead to paper misfeeds.
- Leaving paper out of its package under high temperature and high humidity conditions may lead to problems caused by ambient moisture. After loading paper into drawers, store the remaining paper sealed in the paper storage bag. Also, before leaving the copier in disuse for a prolonged period of time, remove the paper from the drawer(s) and seal it in the paper storage bag to protect it from moisture.

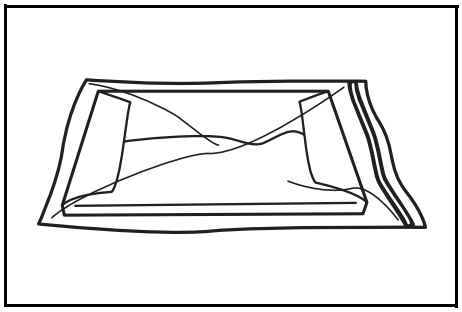

IMPORTANT!

Special Types of Paper

The size of the paper to be accommodated by the drawer or multi-bypass tray can be set. (Refer to P.3-5 **"Multi-bypass Tray Size Input"** and P.3-6 **"Inputting Custom Sizes"**.)

Loading into a Drawer

Regular paper, recycled paper and colored paper can be loaded into the drawer. Up to 300 sheets of regular paper (80 g/m^2) or 100 sheets of thick paper (90 - 105 g/m^2) can be set. Sizes which can be loaded are: 11" × 17" to 5 1/2" × 8 1/2", Oficio II, A3 - A5R and Folio.

IMPORTANT!

- When loading paper for the first time or when changing paper sizes, use the operation panel to indicate the drawer size. (Refer to P.3-3 **"Drawer Size Detection"**.) This can also be set in the Default Settings Mode. (Refer to P.6-21 **"Drawer Paper Size (Drawers 1 to 4)"**.)

[Inch specifications]

- When using sizes that are Oficio II, A3 to A5R, set the size. (Refer to P.3-6 **"Inputting Custom Sizes"**.) This can also be set in the Default Settings Mode. (Refer to P.6-23 **"Custom Size (1 to 2)"**.)

[Metric specifications]

- When using sizes that are Oficio II, 11" × 17" to 5 1/2" × 8 1/2", set the size. (Refer to P.3-6 **"Inputting Custom Sizes"**.) This can also be set in the Default Settings Mode. (Refer to P.6-23 **"Custom Size (1 to 2)"**.)

1 Pull the drawer all the way out towards you.

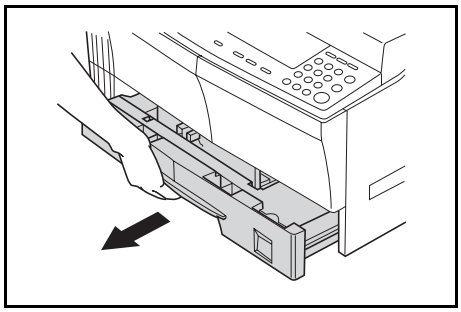

Note
Do not pull out several drawers at one time.

2 Push down on the drawer base plate and secure it.

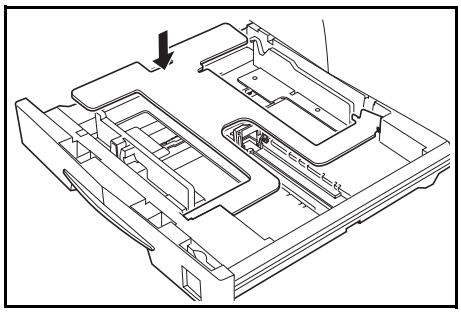

3 Grasp the Width Size Adjustment tab and match the paper size to the Width Guide.
The paper sizes are impressed in the drawer.

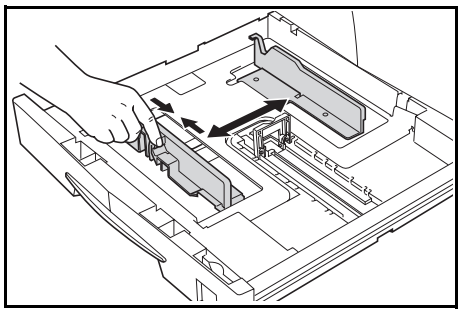

4 Grasp the Length Size Adjustment tab and match the paper size to the Length Guide.
The paper sizes are impressed in the drawer.

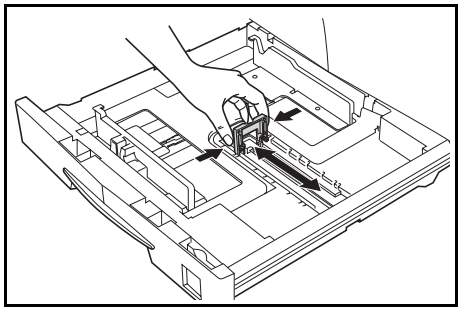

IMPORTANT!
When setting 11" × 17" paper, move the length size adjustment tab to the right side end and push it down as shown in the illustration below.

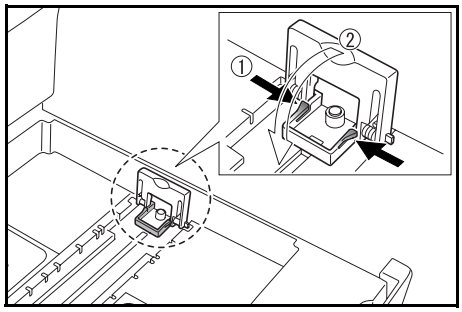

5 Set the paper straight from the upper part.

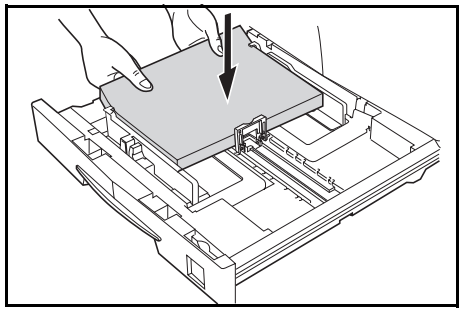

IMPORTANT!

- Be careful not to bend and crease the paper when inserting it into the drawer. Creases in the paper may lead to paper misfeeds.
- The maximum paper limit indicator (1) is on the Width Guide. Make sure that the paper loaded is below the maximum limit indicator.
- When loading paper into the drawer, set it so that the side which was facing upwards in its packaging faces up.
- Always match the Width and Length Guides to the paper size before loading the paper. Failure to do so may result in paper skewing or jamming.
- Make sure that the Length and Width Guides are flush against the paper. If there is space between the Guide and the paper, adjust the Length or Width Guide to eliminate it. If the Guides are not firmly set against the paper, a size that is different from that in the drawer may be displayed on the Paper Selection display.
- When the paper has become wrinkled from moisture, set the paper so that the wrinkled side is towards the Length Guide.

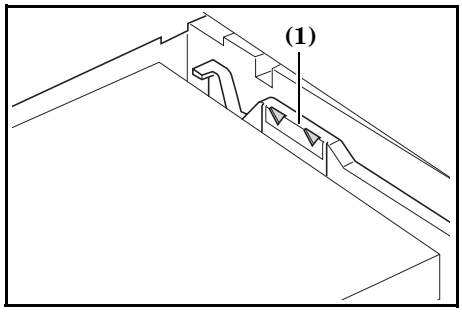

Note
When loading paper into the drawer, set it so that the side that is to be copied faces upwards.

6 Set the accompanying paper sheet so that the paper size set in the drawer can be identified from the front of the drawer.

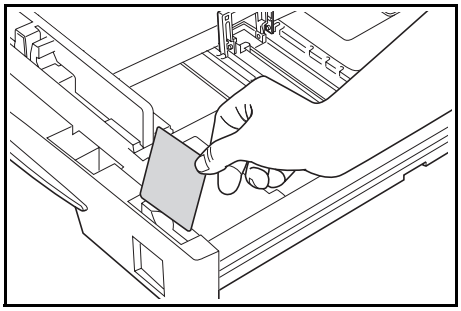

7 Gently push in the drawer.

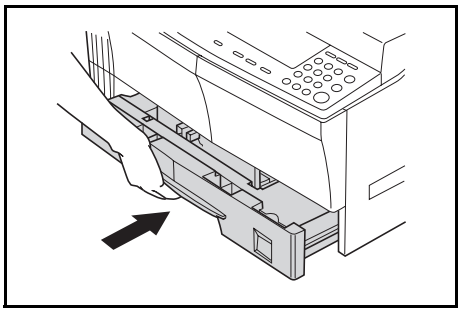

Note
When the copier will not be used for a long period of time, remove the paper from the drawer or feeder, put it in a storage bag and seal the bag in order to protect the paper from humidity.

Drawer Size Detection

Set the Size Detection on the operation panel to match the size of the paper loaded in the drawer. The copier has been set at the time of shipping for automatic detection in inch units for inch specifications, or in centimeter units (A·B columns) for metric specifications.

1 Press the [Paper Select] key for 3 seconds. The Default Settings Mode will be displayed.

Inch specifications **Metric specifications**

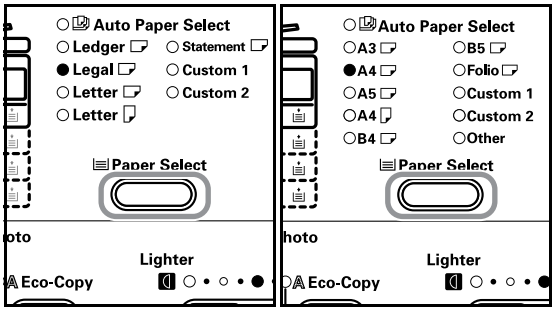

2 Press either the Zoom (+) or Zoom **(–)** key to display the "F17 (Drawer 1 Paper Size)".

Inch specifications **Metric specifications**

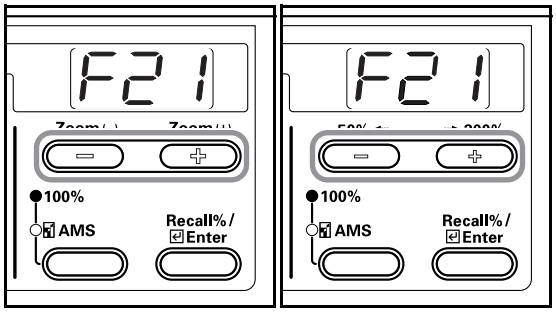

Note
When setting the size of the optional drawer (2 - 4), display F18 (Drawer 2 Paper Size), F19 (Drawer 3 Paper Size) and F20 (Drawer 4 Paper Size).

3 Press the [Enter] key.

Inch specifications **Metric specifications**

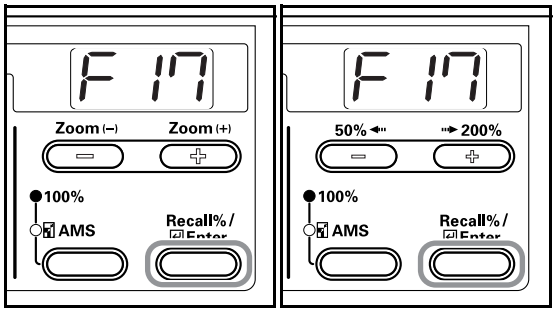

4 Press either the Zoom (+) key or the Zoom **(–)** key and select the drawer size. The drawer sizes displayed are as given in the table below.

Inch specifications **Metric specifications**

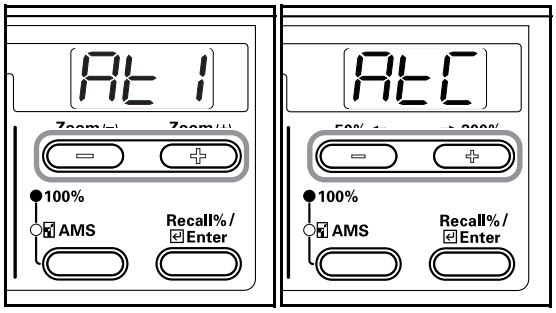

Display	Drawer Size
AE 1 (AtI)	Automatic Detection in inch units
AEC (AtC)	Automatic Detection in centimeter units (A·B columns)
o2r (o2r)	Oficio II

5 The display will blink and copying can begin.

Inch specifications **Metric specifications**

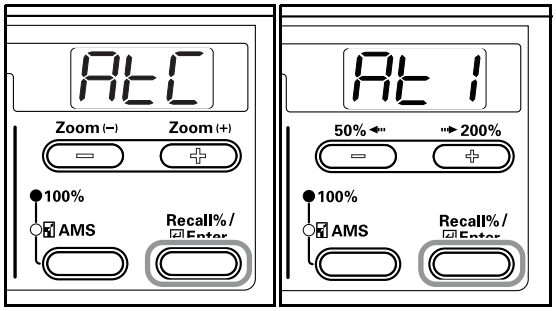

Setting paper on the multi-bypass tray

In addition to regular Paper and recycled paper, special paper (45 - 160 g/m^2) can also be set.
Up to 50 sheets of regular weight (80 g/m^2) paper (25 sheets of 11" × 17", 8 1/2" × 14" or A3, B4, Oficio II, Folio) can be set. The paper sizes that can be used are: 11" × 17" to 5 1/2" × 8 1/2", A3 to B6R, A6R, Oficio II, Postcard and Folio.
When making copies onto special paper, always use the Multi-bypass tray.

Note
The types of special paper that can be loaded and their respective quantities are as follows.
Color Paper: 50 sheets
Postcards: 10 sheets
Thin Paper/Thick Paper (45 - 160 g/m^2): 50 sheets - 5 sheets (quantity differs depending on paper size and thickness)

IMPORTANT!
- Set the paper size and type according to that set in the Paper Feed. (Refer to P.3-5 **"Multi-bypass Tray Size Input"**.)
  This can also be set in the Default Settings Mode. (P.6-22 **"Multi-bypass Tray Paper Size"**)
- When using non-standard size paper, register the paper size as Custom (1, 2). (Refer to P.3-6 **"Inputting Custom Sizes"**.) This can also be set in the Default Settings Mode. (P.6-23 **"Custom Size (1 to 2)"**)
- When loading the thick paper (90 - 160 g/m^2) or thin paper (45 - 63 g/m^2), set the Paper Type. (Refer to P.3-7 **"Selecting Special Paper Types"**.)
- When "Postcard" has been set for either Custom 1 or 2 during the Custom Size input, selecting Custom 1 or 2 (Postcard) using the [Paper Select] key will cause the Thick Paper display to light up. (Refer to P.3-6 **"Inputting Custom Sizes"**.)

1 Open the Multi-bypass tray.

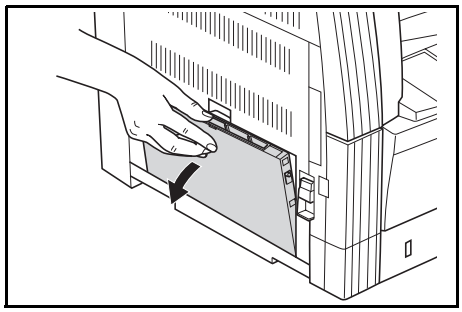

Note
When setting paper sizes greater than 8 1/2" × 11"/A4R, pull out the Multi-bypass tray Support Tray to match the paper size.

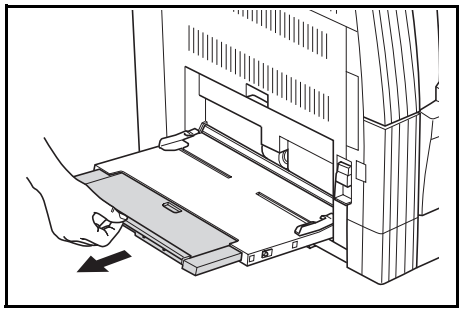

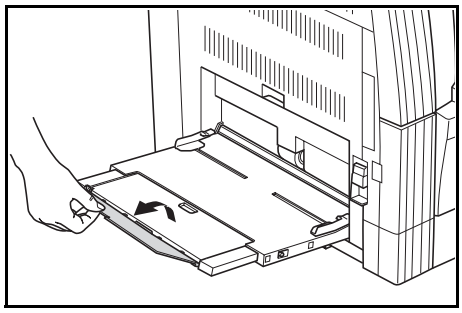

2 Adjust the Insert Guides to the width of the paper being set.

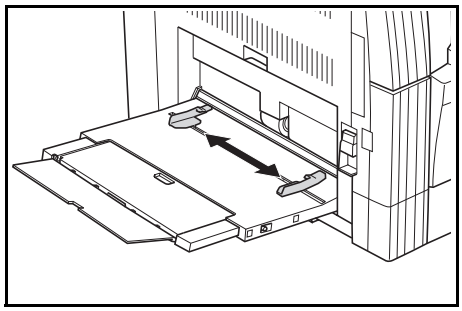

3 Use the Insert Guides to push the paper in until it reaches the point where it stops.

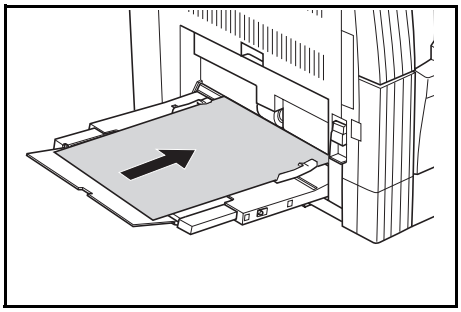

IMPORTANT!
Always straighten out postcards and other types of thick paper that are curved before using them.
There may be cases in which the feeding operation cannot be carried out due to the quality of the paper.

IMPORTANT!
- When loading paper into the drawer, set it so that the side which was facing upwards in its packaging faces downwards. If the front of the paper is bent backwards, straighten it out before setting it.
- Check to make sure there are no creases, etc. in the paper. Creases in the paper may lead to paper misfeeds.

Multi-bypass Tray Size Input

Adjust the paper in the Multi-bypass Tray and register the paper size using the Operation Panel.

1 Press the [Paper Select] key for 3 seconds. The Default Settings Mode will be displayed.

Inch specifications **Metric specifications**

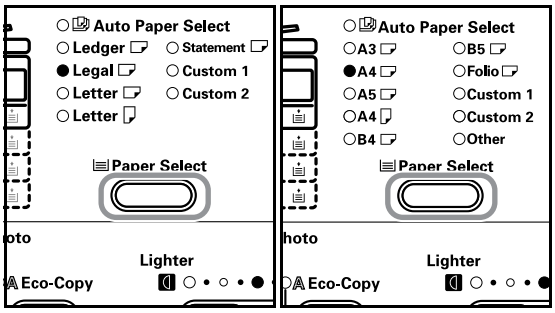

2 Check to make sure that "F21 (Multi-bypass Tray Paper Size)" is displayed and then press the [Enter] key.

Inch specifications **Metric specifications**

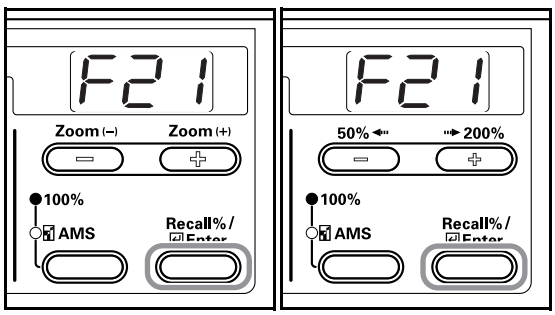

3 Press either the Zoom (+) key or the Zoom **(–)** key and select the paper size. The paper sizes displayed are as given in the table below.

Inch specifications **Metric specifications**

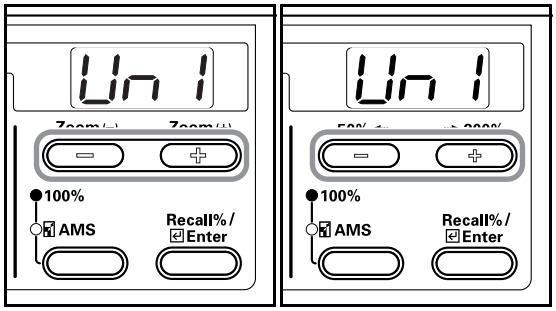

Display: Paper Sizes

Inch specifications	Metric specifications
Un 1 (UnI): Universal Size	Un 1 (UnI): Universal Size
Ldr (Ldr): Ledger Horizontal	A3r (A3r): A3 Horizontal
LGr (LGr): Legal Horizontal	A4r (A4r): A4 Horizontal
Ltr (Ltr): Letter Horizontal	A4E (A4E): A4 Vertical
LtE (LtE): Letter Vertical	A5r (A5r:): A5 Horizontal
Str (Str): Statement Horizontal	b4r (b4r): B4 Horizontal
Cu 1 (Cu1): Custom 1	b5r (b5r): B5 Horizontal
Cu2 (Cu2): Custom 2	For (For): Folio Horizontal
	Cu 1 (Cu1): Custom 1
	Cu2 (Cu2): Custom 2

IMPORTANT!
Use the illustration below as a reference when setting the paper in the "vertical direction" in the Multi-bypass Tray.

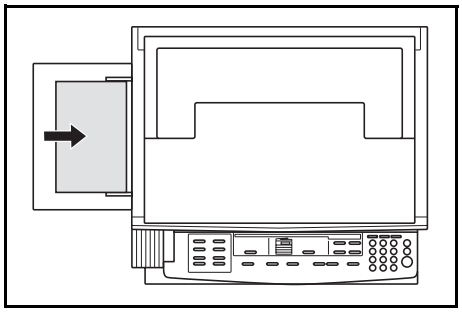

4 Press the [Enter] key. The display will blink and copying can begin.

Inch specifications **Metric specifications**

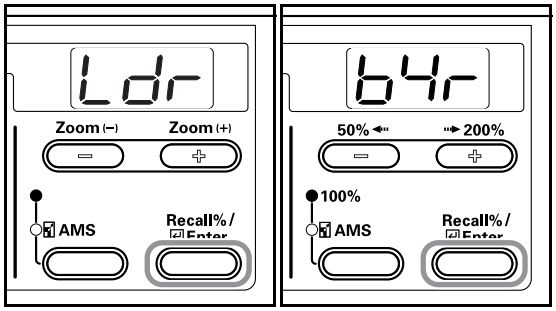

Inputting Custom Sizes

Sizes that are not displayed on the Operation Panel are registered as Custom Sizes.

1 Press the [Exposure Adjustment] keys on both sides for 3 seconds. "F00 (Default Setting Mode)" will be displayed in the No. of Copies display.

Inch specifications **Metric specifications**

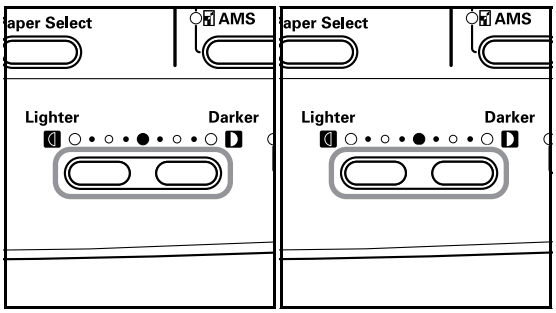

2 Press either the Zoom (+) or Zoom **(–)** key to display the "F22 (Custom1 Size)".

Inch specifications **Metric specifications**

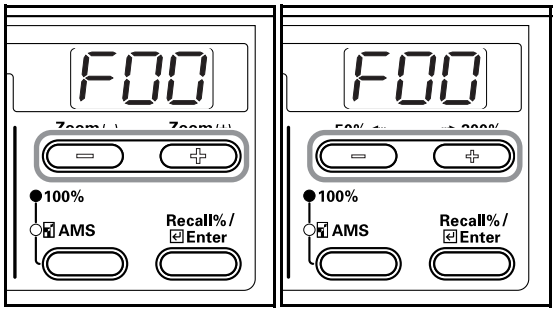

3 Press the [Enter] key.

Inch specifications **Metric specifications**

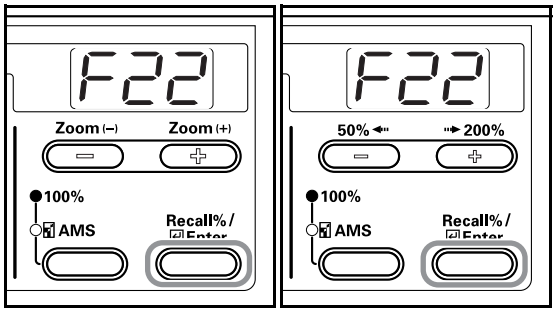

4 Press either the Zoom (+) key or the Zoom **(–)** key and select the size. The paper sizes displayed are as shown in the table below. When selecting Irregular Sizes, carry out the following procedure. In the case of the selection of other sizes, proceed to Step 9.

Inch specifications **Metric specifications**

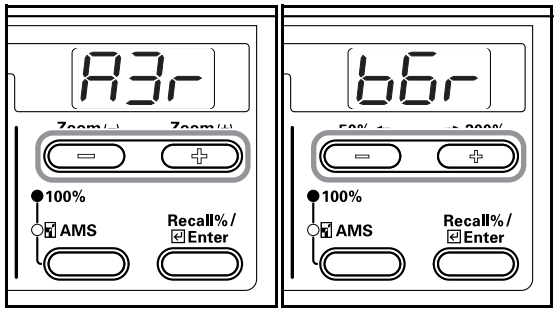

Display: Sizes

Inch specifications	Metric specifications
b5E (b5E): B5 Vertical	A3r (A3r): A3 Horizontal
b6r (b6r): B6 Horizontal	A4r (A4r): A4 Horizontal
A6r (A6r): A6 Horizontal	A4E (A4E): A4 Vertical
PoS (PoS): Postcard	A5r (A5r:): A5 Horizontal
Ldr (Ldr): Ledger Horizontal	b4r (b4r): B4 Horizontal
LGr (LGr): Legal Horizontal	b5r (b5r): B5 Horizontal
Ltr (Ltr): Letter Horizontal	b5E (b5E): B5 Vertical
LtE (LtE): Letter Vertical	b6r (b6r): B6 Horizontal
Str (Str): Statement Horizontal	A6r (A6r): A6 Horizontal
o2r (o2r): Oficio II	PoS (PoS): Postcard
CPF (CPF): 11" × 15" Horizontal	For (For): Folio Horizontal
InP (InP): Irregular Size	o2r (o2r): Oficio II
	CPF (CPF): 11" × 15" Horizontal
	InP (InP): Irregular Size

5 Press the [Enter] key. The Width can be input after 2 blinks.

Inch specifications **Metric specifications**

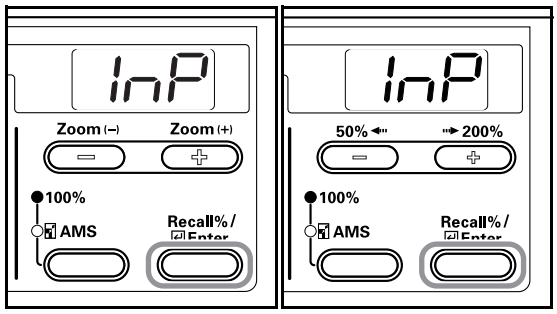

6 Press either the Zoom (+) or Zoom **(–)** key and input the Length Size (Y Direction). 3.88 - 11.63(")/98 - 297 (mm): The range in which setting is possible.

Inch specifications **Metric specifications**

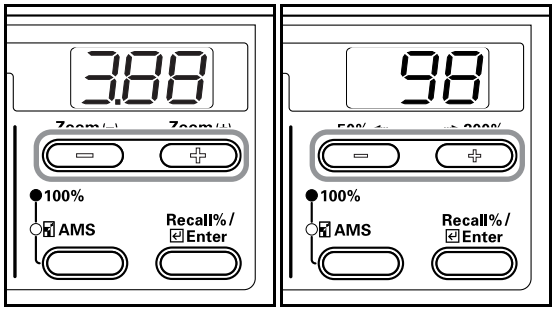

7 Press the [Enter] key. The Width can be input after 2 blinks.

Inch specifications **Metric specifications**

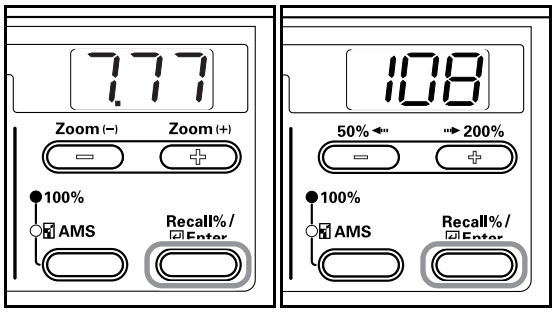

8 Press either the Zoom (+) or Zoom **(–)** key and input the Width Size (X Direction). 5.88 - 17.00(")/148 - 432 (mm): The range in which setting is possible.

Inch specifications **Metric specifications**

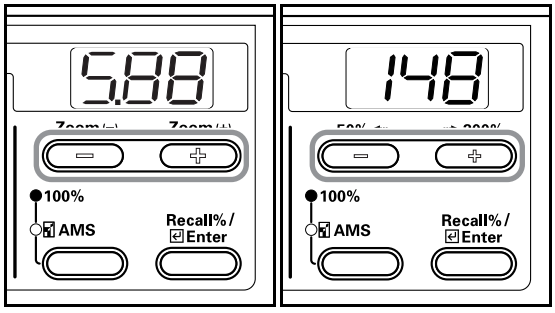

9 Press the [Enter] key. The display will blink and the copier will return to the Default Settings Mode.

Inch specifications **Metric specifications**

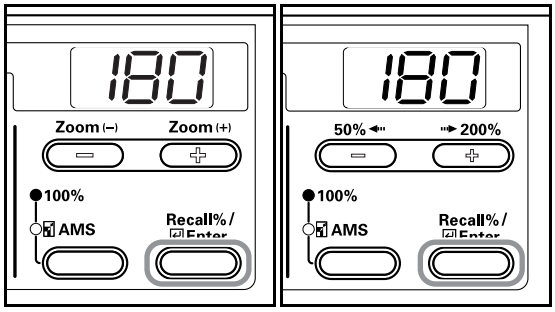

10 Press either the Zoom (+) or Zoom **(–)** key to display "F00".

Inch specifications **Metric specifications**

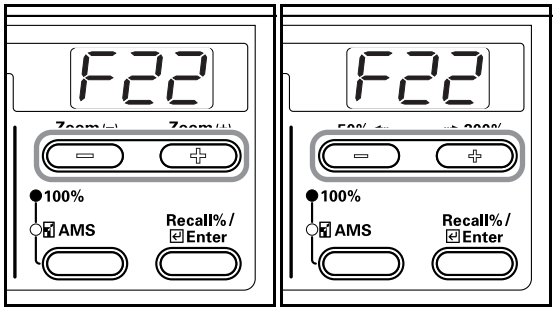

11 Press the [Enter] key. Copying can be begun.

Inch specifications **Metric specifications**

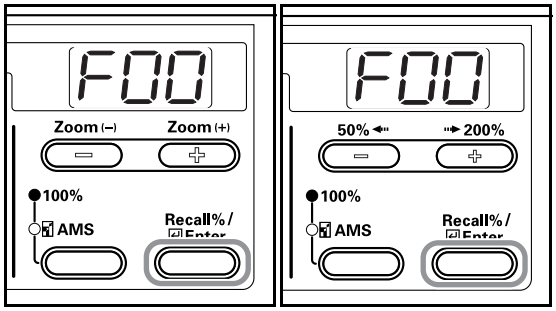

Selecting Special Paper Types

Select the Paper Type when copying on special types of paper such as thick paper and thin paper. When the Paper Type has been selected, the copier will change the fixing temperature to match the paper.

1 Press the Paper Type Selection key and select the type of paper. The indicator for the type of paper selected will light up.

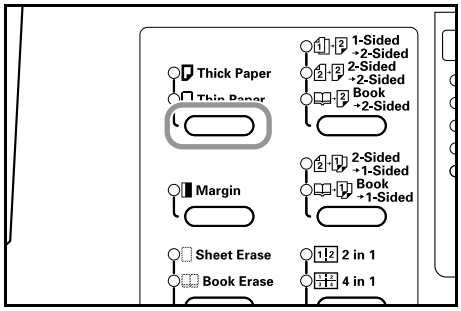

2 Proceed with the copying operation.

Notes

- When Paper Type has been selected, the copying speed is reduced.
- When "Postcard" has been set for either Custom 1 or 2 during the Custom Size input, selecting Custom 1 or 2 (Postcard) using the [Paper Select] key will cause the Thick Paper display to light up. (Refer to P.3-6 **"Inputting Custom Sizes"**.)

Section 4 BASIC OPERATION

Basic Copying Procedure

1 Warm-up

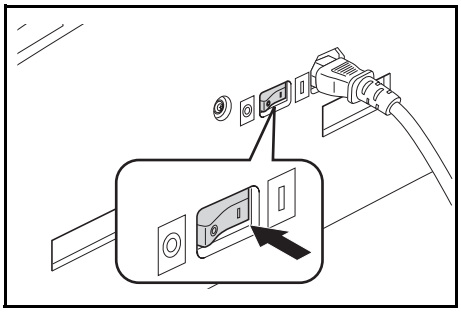

Turn ON (|) the Power Switch. The [Start] key will light up after warm up has been completed.

2 Setting the Original

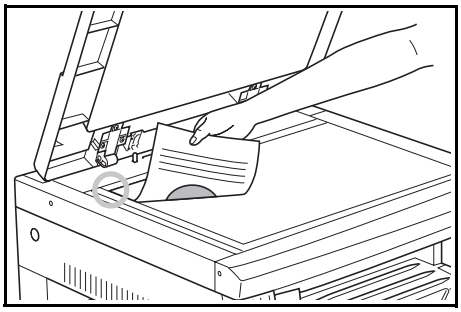

Set the copy original on the glass platen. Align the original so that the left rear corner is flush against the original size indicator.

Note

Please refer to P.7-2 **"Setting Originals in the Document Processor"** for the procedure used for placing the original when using the optional Document Processor.

3 Selecting Functions

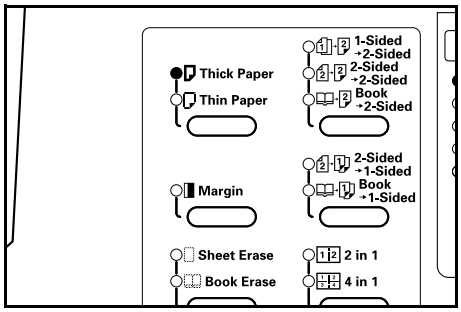

Select any of the various functions available.

- Making enlarged and reduced copies (Refer to P.4-4.)
- Interrupt Copying (Refer to P.4-6.)
- Making 2-Sided copies from various types of originals (Refer to P.5-1.)*
- Page Separation/Split Copy Modes (Refer to P.5-4.)
- Making a margin space on the copies (Refer to P.5-6.)
- Making copies with clean edge (Refer to P.5-8.)
- Fitting the image of either two or four originals onto a single copy page (Refer to P.5-10.)
- Automatic Sorting of copy sets (Refer to P.5-15.)

* The Duplex Unit (option) is necessary.

4 Paper Selection

Inch specifications **Metric specifications**

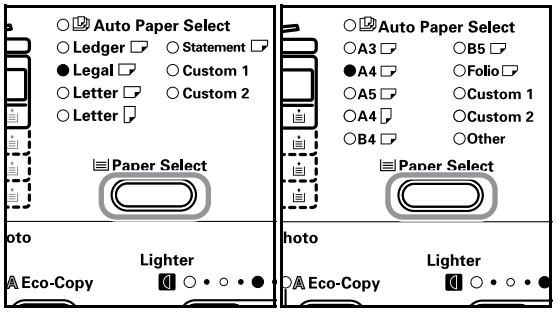

When Automatic Paper Selection is lit, a paper size identical to the original will be automatically selected. Press the [Paper Select] key in order to select a different paper size to copy.

Notes

- It is possible to turn off the Automatic Size Selection function. (Refer to P.6-19 **"Drawer Selection"**.)
- It is also possible to select the drawer that is to be automatically given priority for use. (Refer to P.6-20 **"Selected Drawer"**.)

5 Image Quality Selection

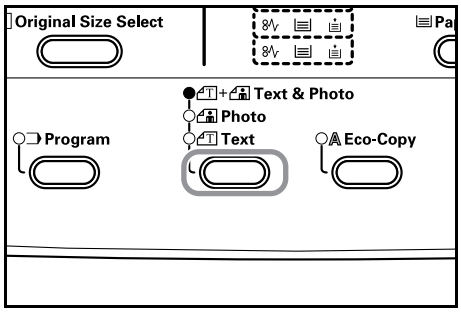

The Image Quality can be selected to match the type of original to be copied. Press the Image Quality Selection key to light up the Image Quality Mode to be used.
Text & Photo Mode: Use this when the original contains a mixture of text and photos.
Photo Mode: Use this when copying a photograph taken with a camera.
Text Mode: Use this when copying originals that contain a large amount of text.

Notes

- The Image Quality Mode selected in the Default Setting Mode can be changed. (Refer to P.6-12 **"Original Image Quality"**.)
- The density of each of the Image Quality Modes can be adjusted. (Refer to P.6-15 **"Text & Photo Mode Exposure Adjustment"**, P.6-16 **"Photo Exposure Adjustment"** and P.6-16 **"Text Adjustment Exposure"**.)
- When horizontal lines stand out in Photo Mode, select Dithering (Refer to P.6-18 **"Photo Processing"**). Note, however, that the images will be rougher when Dithering is used.

6 Adjusting Copy Exposure

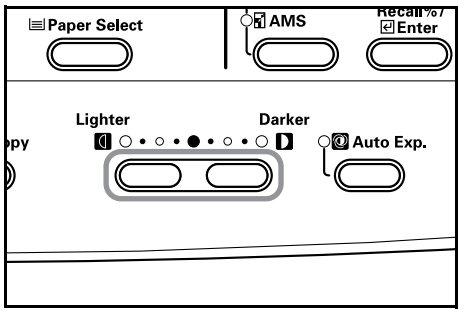

The Copy Exposure (density) is adjusted manually. To make the copy darker, press the Exposure Adjustment key on the right and move the exposure scale to the right. To make the copy lighter, press the Exposure Adjustment key on the left and move the exposure scale to the left.

Pressing the [Auto Exposure] key will detect the copy exposure and set it to the optimal setting.

Notes

- The exposure can be adjusted when the overall exposure is too light or too dark using Auto Exposure. (Refer to P.6-14 **"Auto Exposure Adjustment"**.)
- The Copy Exposure Adjustment can be set to Auto Exposure Mode when setting the Default Settings. (Refer to P.6-13 **"Exposure Mode"**.)
- Pressing the Exposure Adjustment key will move the scale in increments of 0.5 and allow even finer adjustment of the exposure. (Refer to P.6-14 **"Exposure Steps"**.)
- When the Photo Mode has been selected using Image Quality Selection, Auto Exposure cannot be selected.

7 Setting the Number of Copies

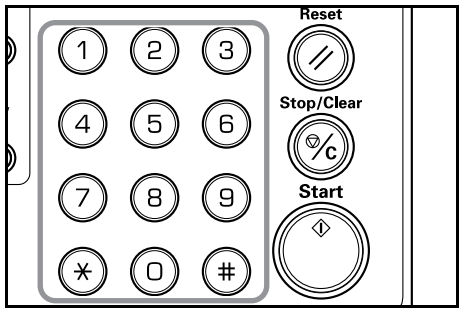

Press the numerical keypad to input and display the desired number of copies. Up to 250 copies can be set at a single time.

Note

The maximum number of copies that can be made at one time can also be restricted. (Refer to P.6-24 **"Copy Limit"**.)

8 Start Copying

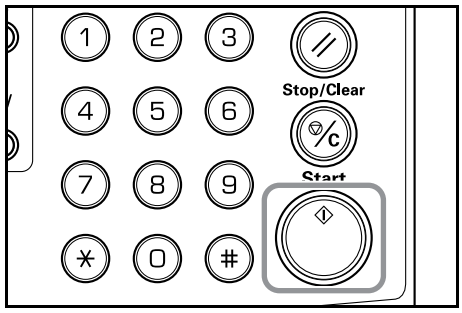

Press the [Start] key When the Start indicator lights green copying can be begun.

9 Completion of the Copying Procedure

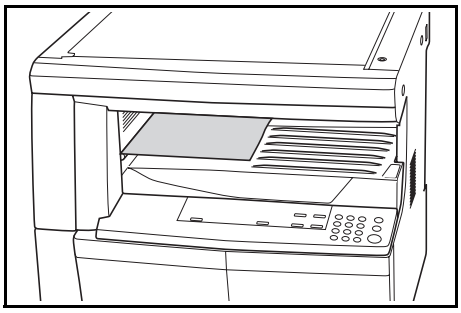

The finished copy will be ejected into the copy store section.

IMPORTANT!
Up to 250 regular paper copies (80 g/m^2) can be stored. Note, however, that the number of copies that can be stored may differ with the condition of the paper used.

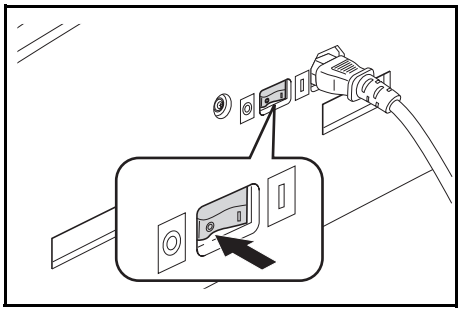

⚠ CAUTION

When the copier will not be used for a period of time, such as at night, turn off the power switch. When it will not be used for longer periods of time such as during long holiday periods, remove the plug from the outlet in the interest of safety.

Making enlarged and reduced copies

Automatic Magnification Selection Mode

Reduction/Enlargement is done to match the selected Paper Size (Drawer).

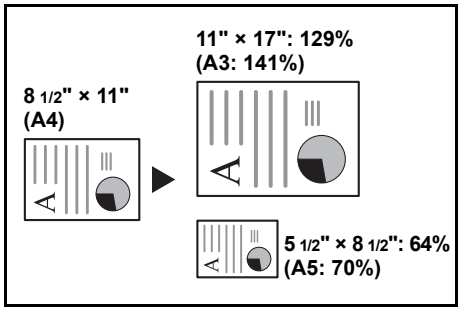

IMPORTANT!
When this is to be used as the default Mode, set the P.6-21 **"Auto Sizing"** to on.

1 Set the original.
The original's size will be automatically detected.

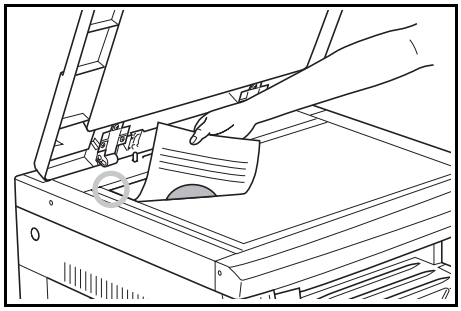

2 Press the Zoom Selection key to light up the Automatic Magnification Selection display.

Inch specifications **Metric specifications**

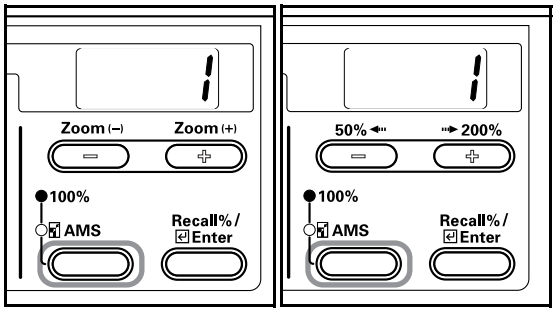

3 Press the [Paper Select] key and select the paper.
The magnification for the copy will be displayed in accordance with the paper size.

Inch specifications **Metric specifications**

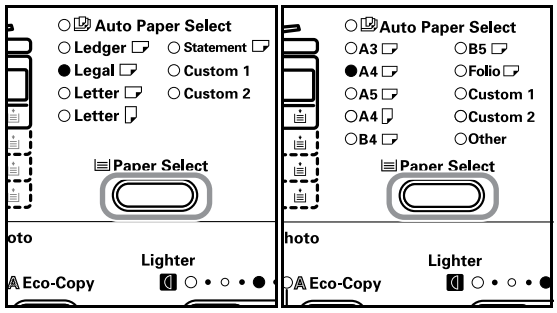

4 Press the [Start] key to begin copying.

Zoom Mode

The magnification can be changed within the range from 50 to 200% in 1 percent increments

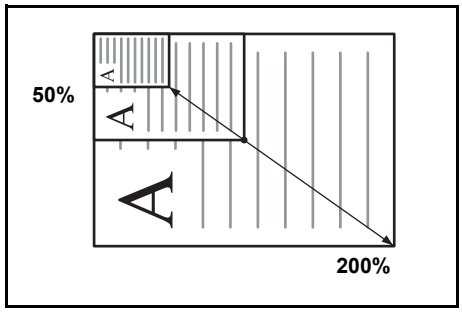

IMPORTANT!
When the magnification is changed in the Auto Paper Select Mode, the magnification for the selected paper size is also changed to match the magnification.

1 Set the original.

2 Press the Zoom (+), Zoom **(–)** or [Recall%/Enter] key.
The copy magnification will be displayed in the No. of Copies display and "%" will light up.

Inch specifications **Metric specifications**

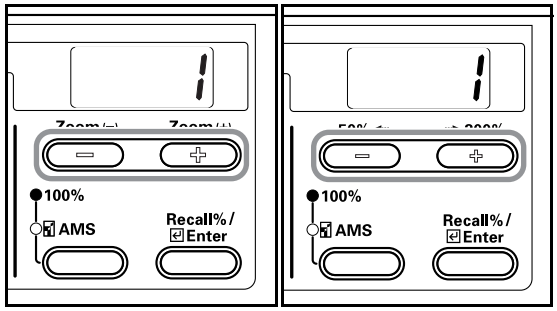

3 Change the zoom percentage displayed using the Zoom (+) or Zoom **(–)** key.
The percentage can also be input using the Keypad.

Inch specifications **Metric specifications**

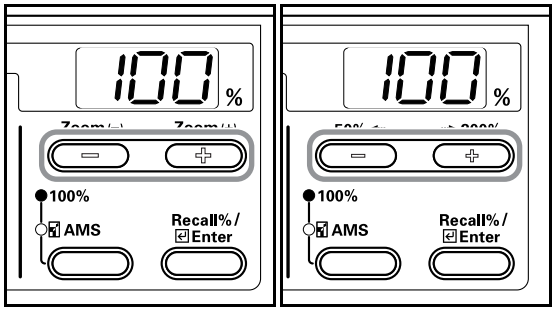

4 Press the [Enter] key. After the zoom percentage has been confirmed the display changes back to the No. of Copies display.

Inch specifications **Metric specifications**

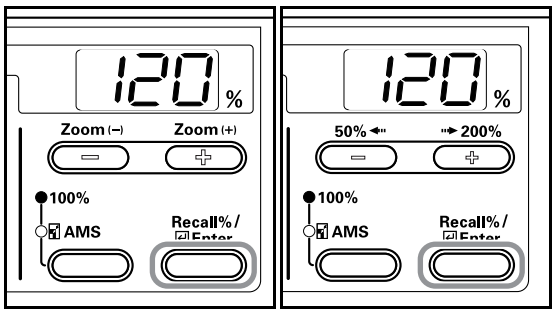

5 Press the [Start] key to begin copying.

Interrupt Copying

Interrupt Copying is useful when you want to make a copy of a different original at different settings during copying operations. After the Interrupt Copy has been produced, the copying operation resumes at the same settings in effect prior to the interruption.

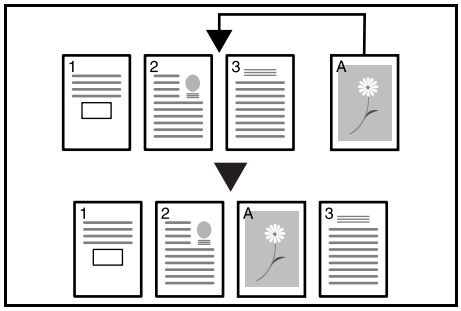

1 Press the [Interrupt] key. The Interrupt indicator will blink. It will stay lit when the Interrupt operation becomes possible.

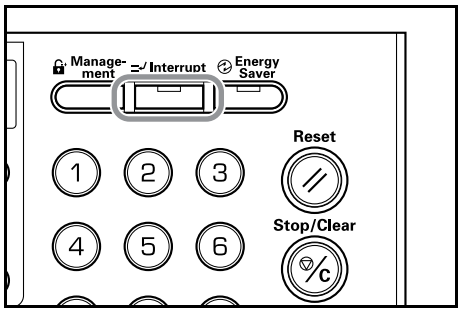

2 Temporarily storing the original during copy operations.

3 Set the original for the Interrupt operation and copy it.

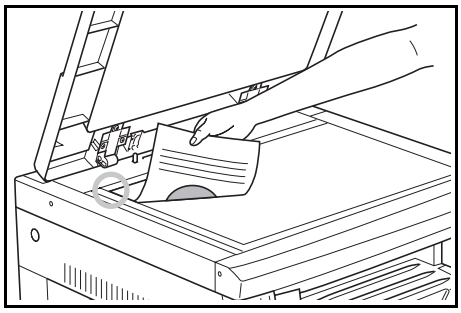

4 After the Interrupt copy has been produced, pressing the [Interrupt] key will cause the display to light up. Replace it with the original that had been put aside and press the [Start] key to resume copying. Press the [Start] key to resume copying.

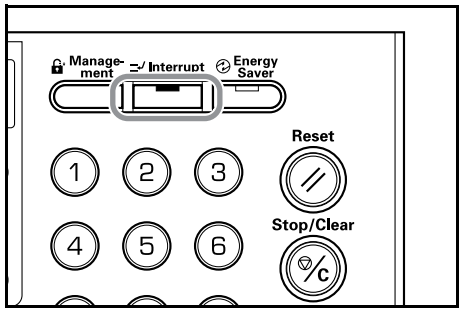

Low Power Mode

Pressing the [Energy Saver] key will put the copier into a resting state even when the Power Switch is ON. The No. of Copies display on the Operation Panel will change to "- - -", the Conserve Power indicator will light up and all other indicators will be turned off. Press any key on the Operation Panel or open and close the Original Cover in order to resume copying operations. In the case where the optional Document Processor is installed, placing an original in the Document Processor will also revert the copier to the state where copies can be made. The recovery time before copies can be made is within 10 seconds.

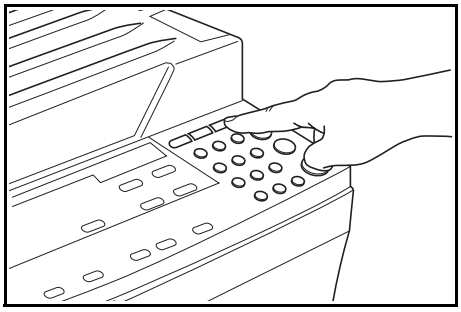

Note

A function to automatically enter the Low Power Mode after a set interval in which no copies have been produced has passed is also included. (Refer to P.6-14 **"Exposure Steps"**.)

Auto Off Mode

The Auto Off Function is a function that automatically turns the copier off after a set period of time (1 to 240 minutes) has passed. "-" is displayed in the No. of Copies display and all other indicators are unlit.
This has been set to 30 minutes at shipping.

Inch specifications **Metric specifications**

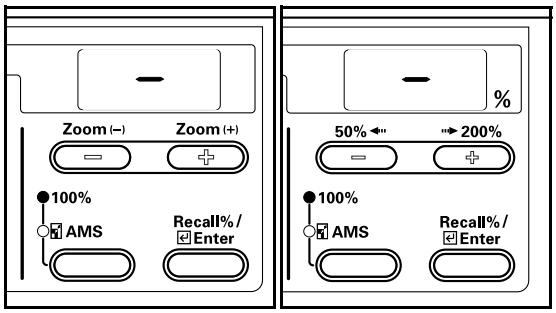

Notes

- In the Off Mode state, the supply of electrical power to everything except the operating section is stopped. When the Power Switch is turned off, the supply of power to everything, including the operating section, is stopped.
- The No. of Copies display will show a "-" for approximately 5 seconds after the Power Switch has been turned off.

Press the [Energy Saver] key in order to resume copying operations. The recovery time before copies can be made is within 19.8 seconds.

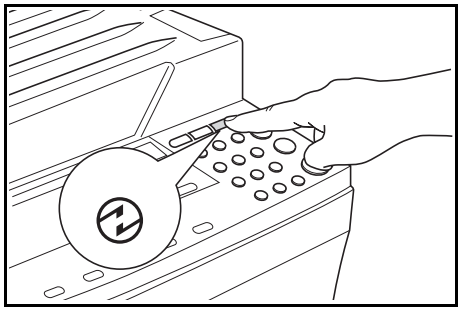

Auto Off Mode

The Auto Off Function is a power-saving function that automatically puts the copier into Off Mode when no copying operations have been performed for a set period of time.
In the case of copiers, the amount of time spent idling rather than copying is large, so the amount of power consumed during idle operation makes up the largest share of their power usage. The consumption of power during idling or when someone forgets to turn the copier off after work can be reduced through the copier unit automatically entering the Off Mode and the electric bill reduced as a result.

Notes

- The time interval before the Auto Off Mode engages can be changed. (Refer to P.6-31 **"Off Mode Transition Time"**.)
- The Auto Off Mode can be deselected. (Refer to P.6-29 **"Auto Off Setting"**.)

Section 5 COPY FUNCTIONS

Making 2-Sided copies from various types of originals

Copies of both sides can be made from open-faced originals as well as from 2-in-1 originals.

Note
The Duplex Unit (option) is necessary.

Making 2-Sided copies from a 2-Sided original

Front and Back side copies are made in the same way as duplex copies.

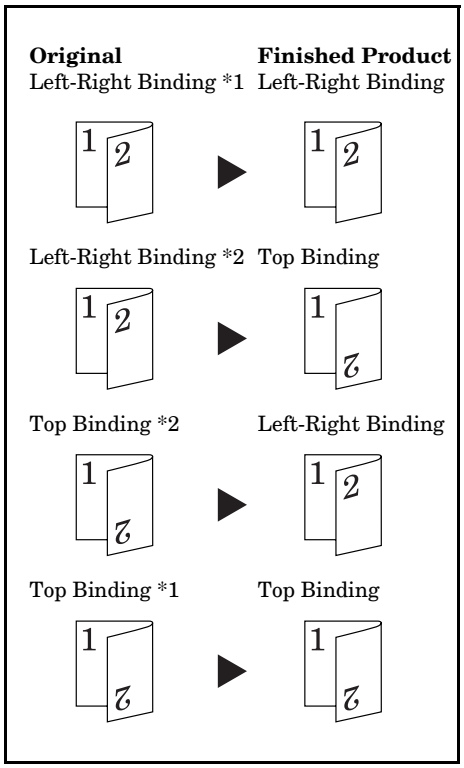

*1 2-Sided Copy reverse side rotation setting: OFF
*2 2-Sided Copy reverse side rotation setting: ON

Notes
[Inch specifications]
- The paper sizes that can be used are 11" × 17", 8 1/2" × 14", 8 1/2" × 11", 11" × 8 1/2" and 5 1/2" × 8 1/2" sizes. A3 to A5R sizes can also be used when Custom Size is set.
- The Duplex Unit (option) is necessary.

[Metric specifications]
- The paper sizes that can be used are from A3 to A5R. 11" × 17", 8 1/2" × 14", 8 1/2" × 11", 11" × 8 1/2" and 5 1/2" × 8 1/2" sizes can also be used when Custom Size is set.
- The Duplex Unit (option) is necessary.

Making 2-Sided copies from an open-faced (book, etc.) original

The double-page original of books, magazines, etc. can be copied onto both sides of the paper by pressing the [Start] key one time.

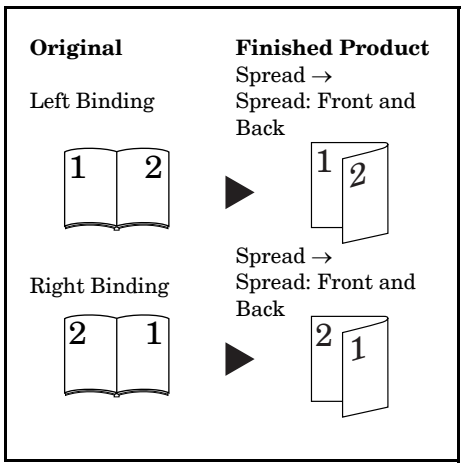

Notes
[Inch specifications]
- The original sizes that can be used are 11" × 17" and 8 1/2" × 11". The paper sizes that can be used are 11" × 8 1/2". A3, B4, A4R, B5R and A5R Original sizes and A4 and B5 paper sizes can also be used when Custom Size is set.
- The paper size can be changed and the magnification adjusted to fit the size of the paper.

[Metric specifications]
- The original sizes that can be used are A3, B4, A4R, B5R and A5R. The paper sizes that can be used are A4 and B5. 11" × 17" and 8 1/2" × 11" Original sizes and 11" × 8 1/2" paper sizes can also be used when Custom Size is set.
- The paper size can be changed and the magnification adjusted to fit the size of the paper.

Making 2-Sided copies from one-sided originals

2-Sided Copy one side of an original to the front and back sides. When the number of pages is an odd number, the back side of the last page is copied as a blank page.

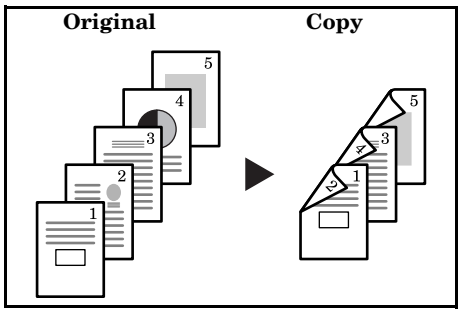

Note

The back side copy can also be rotated 180 degrees and copied.

(1) Original Left/Right Binding → Finished Left/Right Binding:
Setting the 2-Sided Copy reverse side setting to OFF will result in the reverse side being copied as is.

(2) Original Left/Right Binding → Finished Top Binding:
Setting the 2-Sided Copy reverse side setting to ON will result in the reverse side being copied after being rotated 180 degrees. The finished copy is bound at the top, and each page spread copied in the same direction.

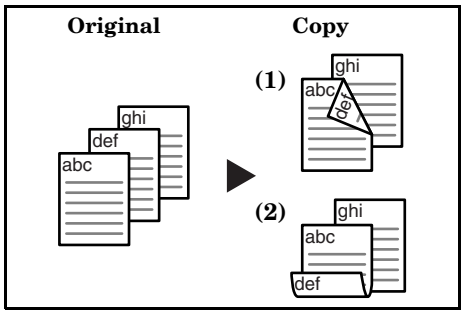

1 Set the original.

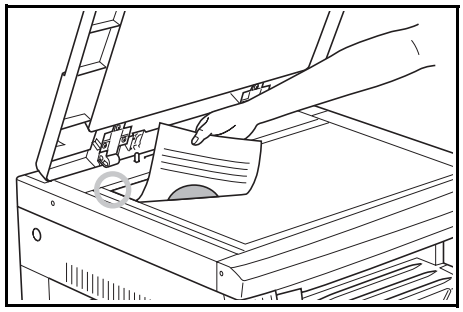

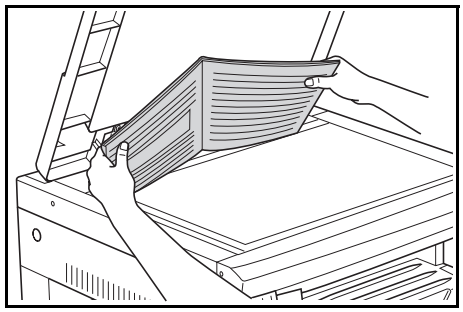

Note

The underside Rotate Copy can also be set in the Default Setting Mode. (Refer to P.6-24 **"2-Sided Copy Reverse Side Rotation"**.)
The value set in the Default Setting Mode will inherit the value that is set at the time when the copy is made.

2 Press the 2-Sided Copy key, select the type of original, and select [2-Sided → 2-Sided], [Book → 2-Sided] or [1-Sided → 2-Sided] to light up the corresponding display.

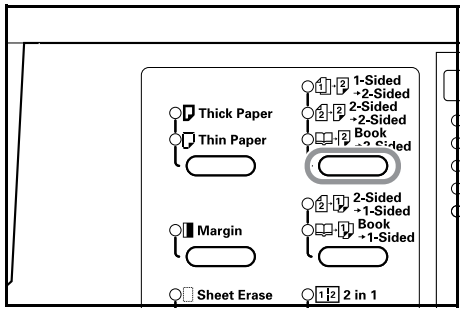

Note

Set the original in the optional Document Processor when making copies from 2-in-1 originals.

3 Input the number of sets of copies using the Keypad.

4 Press the [Start] key.
The copier will begin scanning the original.

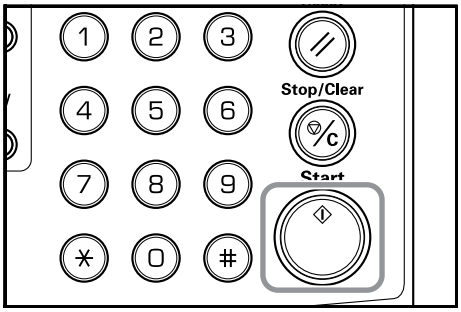

When an original has been set in the optional Document Processor copying will begin automatically.
When the original has been set on the platen and the scanning of the original completed, "1-" (No. of Originals Read In) is displayed and the 2-Sided Copy display blinks. When this occurs, carry out the following procedure.

Inch specifications **Metric specifications**

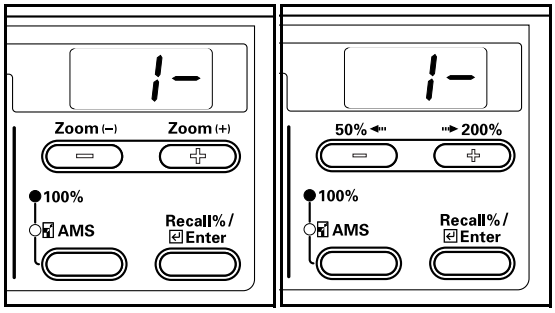

5 Replace the original with the next one and press the [Start] key.
The copier will scan the original.

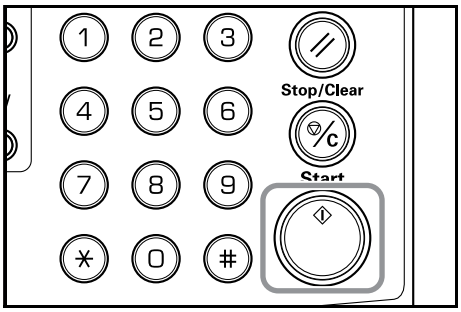

6 If there are no more originals to be scanned, press either the 2-Sided Copy key or the [Enter] key.
The copier will begin copying.

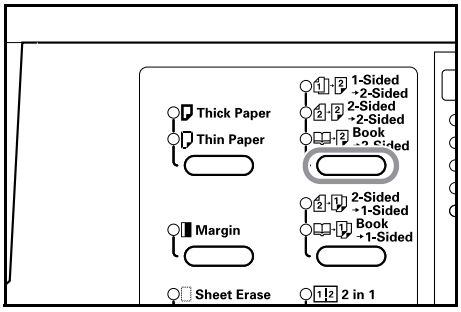

2-Sided Copy Reverse Side Rotation Setting

Follow the procedure below to change the rotation setting for the reverse side when making 2-Sided copies.

1 Press the 2-Sided Copy key for 3 seconds.
The Default Setting Mode for the reverse side setting of 2-Sided Copies will be displayed.

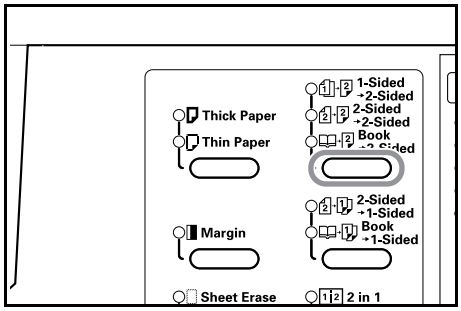

2 Press either the Zoom (+) or Zoom **(–)** key and select either "on" in the case where the reverse side is to be rotated or "oFF" when it isn't to be rotated.

Inch specifications **Metric specifications**

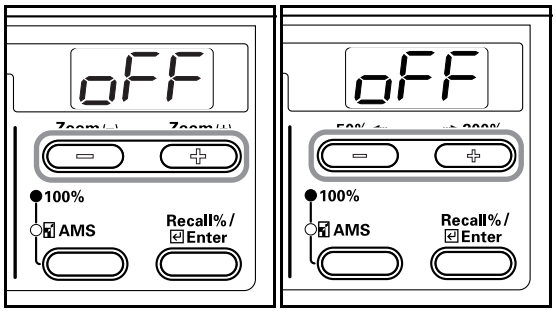

3 Press the [Enter] key.
The display will blink and the copier will return to the state where copying can be continued.

Inch specifications **Metric specifications**

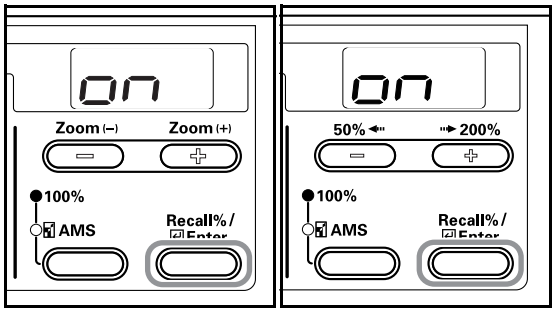

Copying two-page originals onto separate sheets: Page Separation/Split Copy Modes

Page separation/Split copy from book originals

Copy books, magazines, etc. with two facing pages of an open-faced original onto separate sheets of paper.

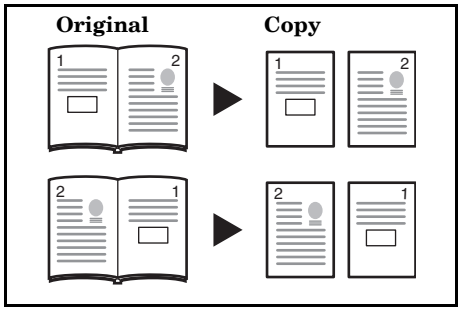

Notes

[Inch specifications]

- The original sizes that can be used are 11" × 17" and 8 1/2" × 11". The paper sizes that can be used are 11" × 8 1/2". A3, B4, A4R, B5R and A5R Original sizes and A4 and B5 paper sizes can also be used when Custom Size is set.
- The paper size can be changed and the magnification adjusted to fit the size of the paper.

[Metric specifications]

- The original sizes that can be used are A3, B4, A4R, B5R and A5R. The paper sizes that can be used are A4 and B5. 11" × 17" and 8 1/2" × 11" Original sizes and 11" × 8 1/2" paper sizes can also be used when Custom Size is set.
- The paper size can be changed and the magnification adjusted to fit the size of the paper.

Page separation/Split copy from 2-sided originals

The original is copied separately as simplex pages.

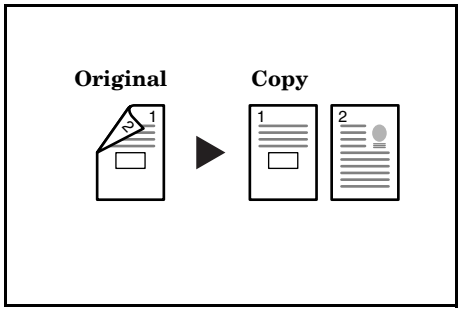

Note

The Document Processor (option) is necessary.

1 Set the original.

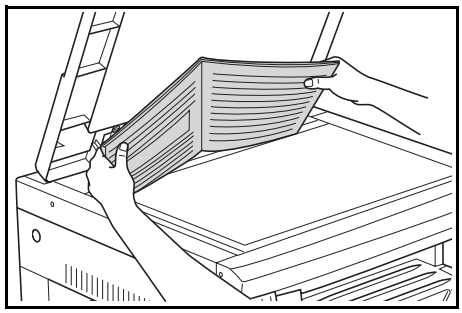

Note

Set the original in the optional Document Processor when making copies from Front and Back originals.

2 Press the Split Copy key, select the type of original, and select [2-Sided → 2-Sided] or [Book → 1-Sided] to light up the corresponding display.

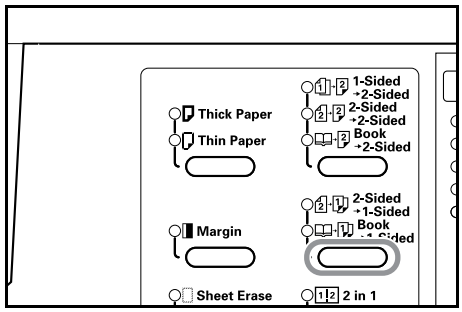

3 Press the [Start] key.
The copier will begin copying.
In the case where Sort Copies has been set, proceed to Step 4.

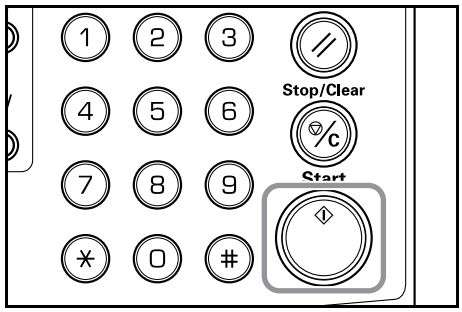

4 Replace the original with the next one and press the [Start] key.
The copier will scan the original.

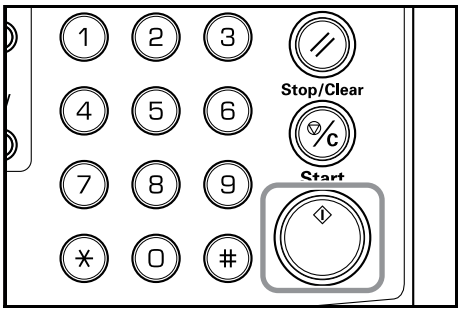

5 If there are no more originals to be scanned, press the [Enter] key.
The copier will begin copying.

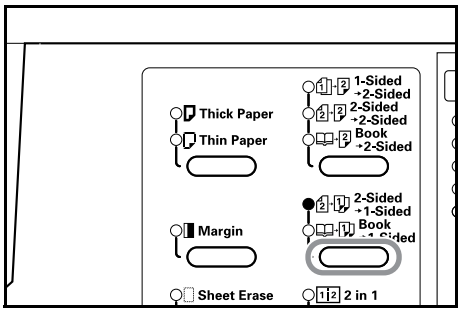

Making a margin space on the copies

Standard Margin

[Inch specifications]
The position of the image of the original is shifted for copying and a 0.13/0.25/0.38/0.50/0.63/0.75 (") (1/8-inch increments) width binding margin created.
[Metric specifications]
The position of the image of the original is shifted for copying and a 1 to 18 mm (1 mm increments) width binding margin created.

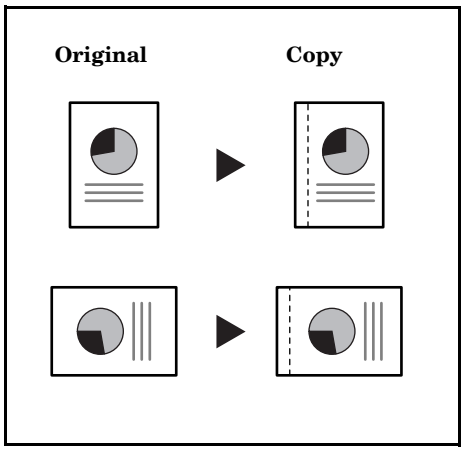

Note
If the left width of the Binding Margin is set when setting the 2-Sided Copy, the right side of the Binding Margin will be set automatically for the reverse side by the 2-sided copy rotational setting in the case where it is rotated.

1 Set the original.

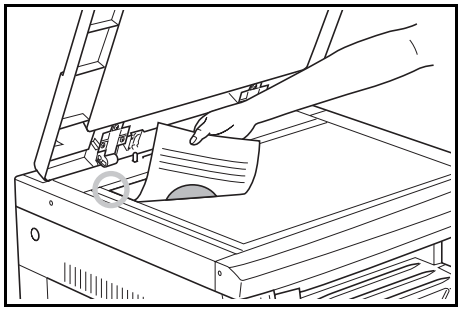

IMPORTANT!
Place the original so that the side to be set for the Margin shift is on the right side (on the left side, in the case of the optional Document Processor) and check its position after setting it. If the original is placed in the wrong direction, the Binding Margin will not be produced in the position set.

Note
The Binding Margin can also be set in the Default Settings Mode. (Refer to P.6-25 **"Margin Shift"**.)
The value set in the Default Setting Mode will inherit the value that is set at the time when the copy is made.

2 Press the [Margin] key.
The Margin Shift display will light up.

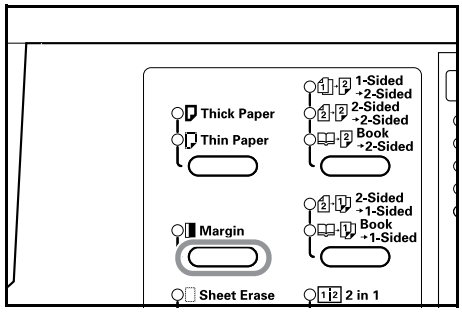

3 Press the [Start] key.
The copier will begin copying.

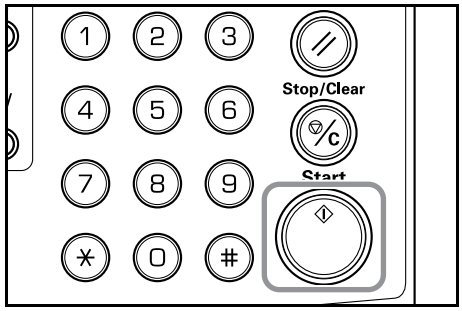

Setting the Margin

Use the procedure given below to change the Margin.

1 Press the [Margin] key for 3 seconds. The Default Settings Mode for the Margin will be displayed.

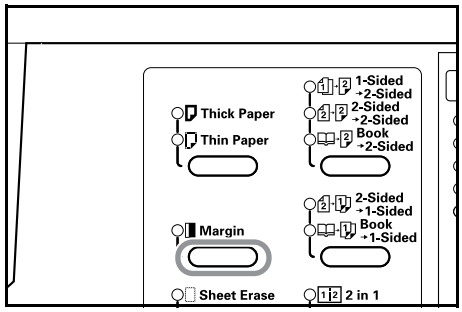

2 Press either the Zoom (+) key or the Zoom **(–)** key and select the binding margin width.

[Inch specifications]

0.13/0.25/0.38/0.50/0.63/0.75("): the range in which the margin can be set.

[Metric specifications]

A margin from 1 - 18 (mm) can be set.

Inch specifications **Metric specifications**

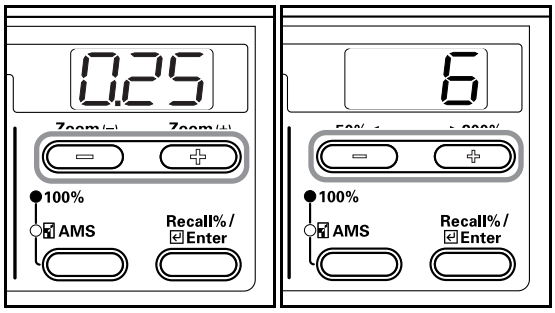

3 Press the [Enter] key.

The display will blink and the copier will return to the state where copying can be continued.

Inch specifications **Metric specifications**

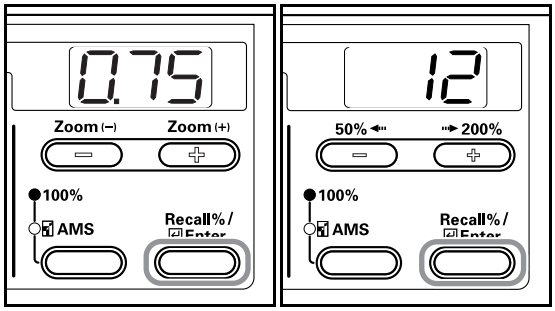

Making copies with clean edges

Erasing blemishes from edges of copies (Sheet erase mode)

[Inch specifications]
Use this to remove the dark shading that appears around sheet originals during copying. Select the border width to be erased from among 0.13/0.25/0.38/0.50/0.63/0.75 ("). (**(A)** in the illustration is the Border Width.)
[Metric specifications]
Use this to remove the dark shading that appears around sheet originals during copying. Select the border width to be erased from 1 - 18 (mm). (**(A)** in the illustration is the Border Width.)

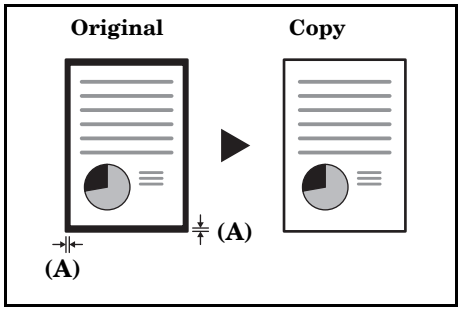

Erasing blemishes from the edges and middle of copies made from books (Book erase mode)

[Inch specifications]
Use this to get a clean copy of thick books. Select the outer border width from among 0.13/0.25/0.38/0.50/0.63/0.75 ("). The center border width will be 2-times that of the outer border width (**(A)** in the illustration is the outer border width and **(B)** is the center border width.)
[Metric specifications]
Use this to get a clean copy of thick books. Select the outer border width from 1 - 18 (mm). The center border width will be 2-times that of the outer border width (**(A)** in the illustration is the outer border width and **(B)** is the center border width.)

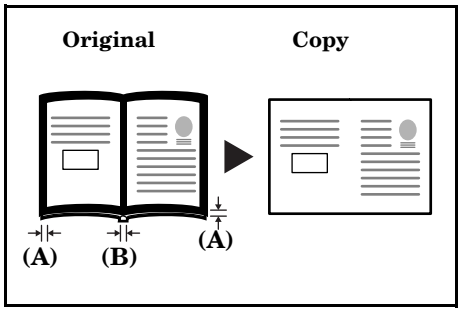

Note
Only standard sizes can be used as the Original size.

1 Set the original.

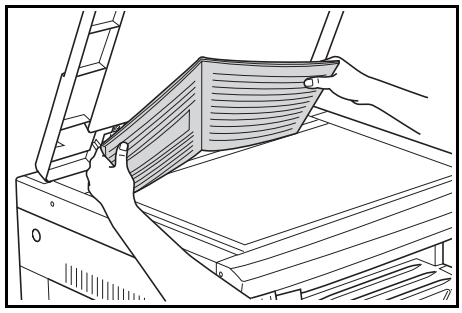

Note
The Border Width can also be set in the Default Settings Mode. (Refer to P.6-26 **"Border Width"**.)
The value set in the Default Setting Mode will inherit the value that is set at the time when the copy is made.

2 Press the [Border Erase] key and select the type of border erase to be performed to light up either the [Sheet Border Erasure] or [Book Border Erasure] display.

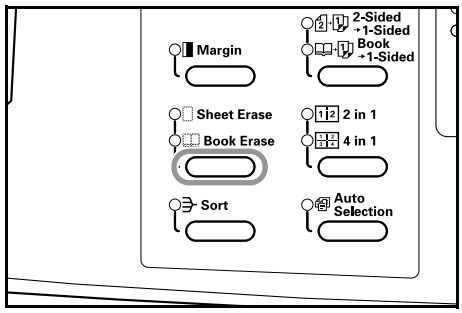

3 Press the [Start] key.
The copier will begin copying.

Setting the Border Width

Use the procedure given below to change the Border Width.

1 Depress the [Border Erase] key for 3 seconds. The Default Settings Mode for the Border Width will be displayed.

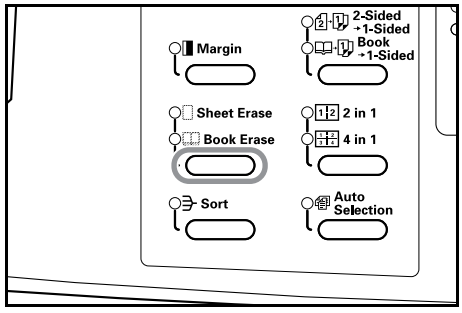

2 Press either the Zoom (+) key or the Zoom **(–)** key and select the border width.

[Inch specifications]

Select from 0.13 ("), 0.25 ("), 0.38 ("), 0.50 ("), 0.63 (") or 0.75 (").

[Metric specifications]

Select from 1 - 18 (mm).

Inch specifications **Metric specifications**

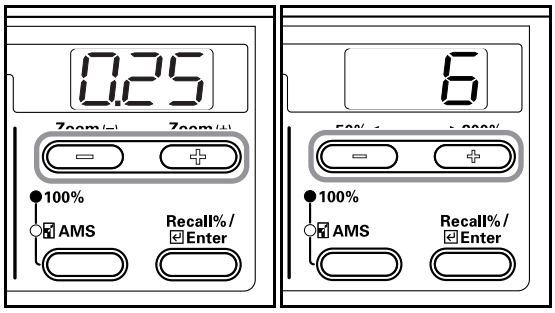

3 Press the [Enter] key.

The display will blink and the copier will return to the state where copying can be continued.

Inch specifications **Metric specifications**

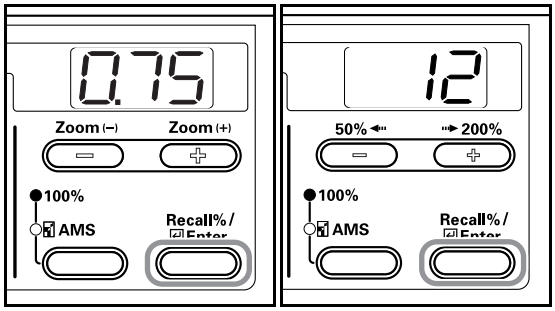

Fitting the image of either two or four originals onto a single copy page

The sizes of 2-sheet or 4-sheet originals can be reduced and copied together onto a single sheet. In addition, the borders of each original can be separated with a solid or dotted line.

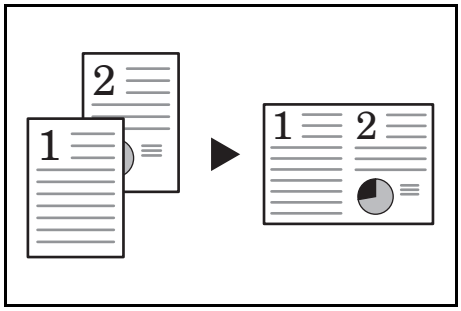

Note
Only regular paper sizes and originals can be used for this.

2 in 1

2 sheets of originals can be copied onto a single sheet. If used together with 2-Sided Copy, 4 sheets of originals can be copied onto both sides of a single sheet.
(Follow the order shown in illustrations 1 → 2 in placing the originals on the platen.)

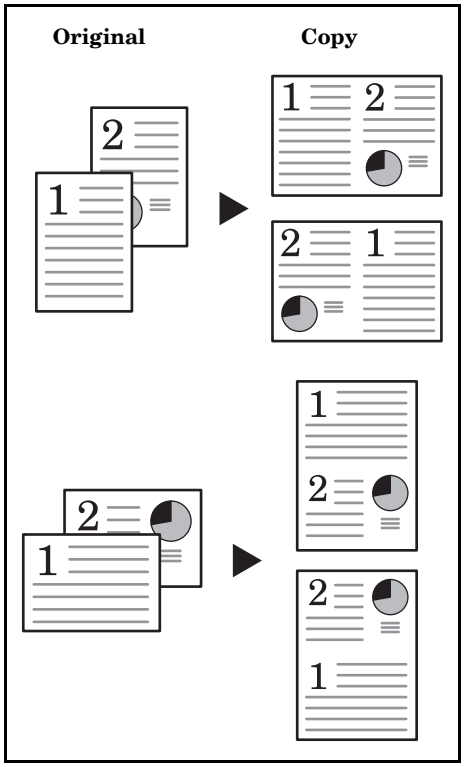

The directions for setting the original and the finished copy are as follows.
<When the original is set on the platen>

Original Setting Direction	Finished Product
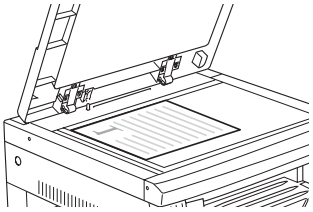	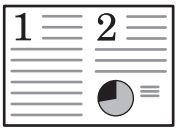
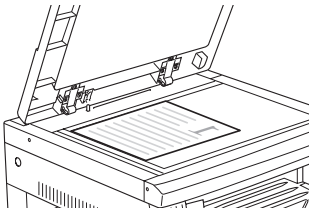	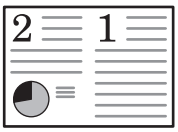
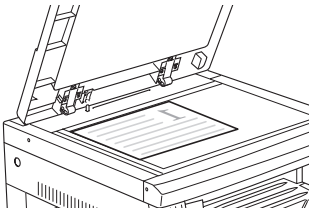	
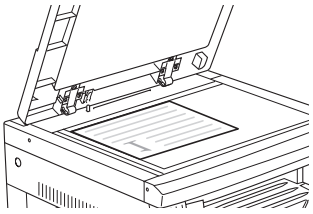	

<When the original is set in the Document Processor>

Original Setting Direction	Finished Product
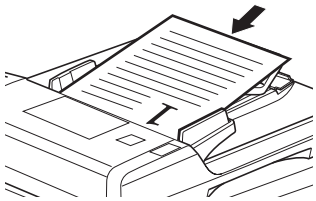	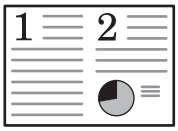
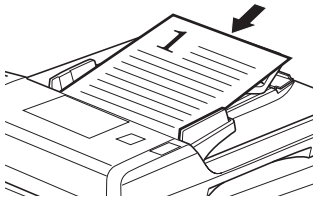	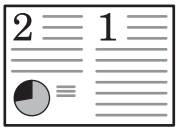
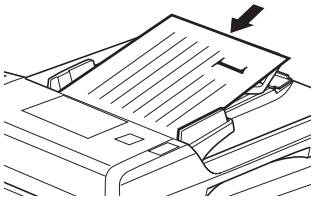	
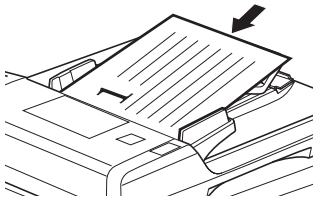	

4 in 1

4 sheets of originals can be copied onto a single sheet. If used together with 2-Sided Copy, 8 sheets of originals can be copied onto both sides of a single sheet.
(Follow the order shown in illustrations 1 → 2 → 3 → 4 in placing the originals on the platen.)

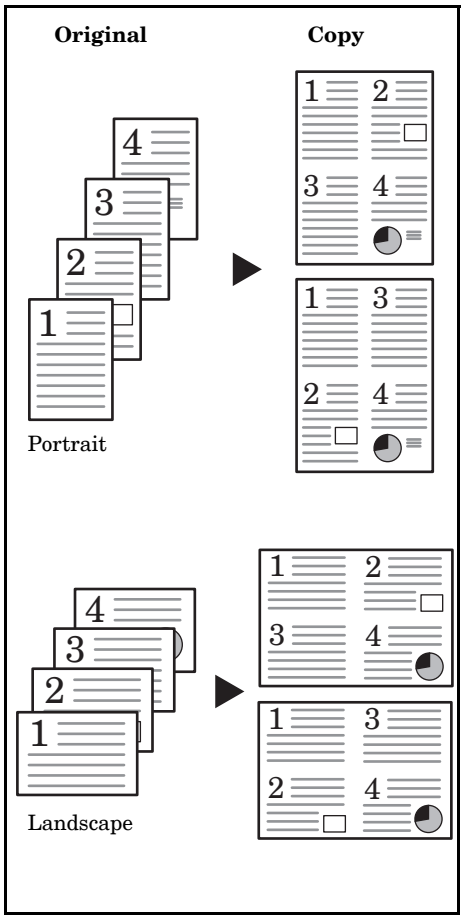

The directions for setting the original and the finished copy are as follows.

<When the original is set on the platen>

Original Setting Direction	Finished Product
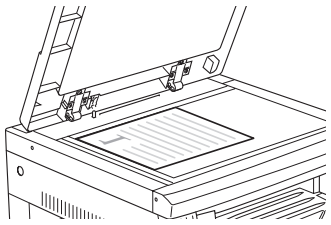	
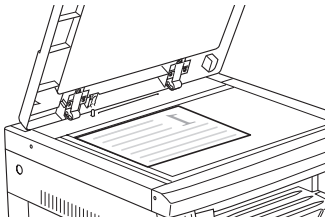	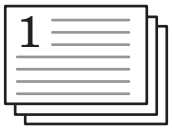

<When the original is set in the Document Processor>

Original Setting Direction	Finished Product
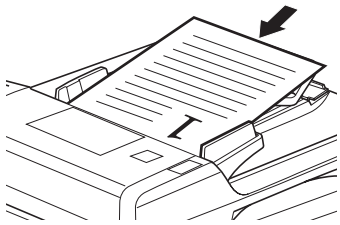	
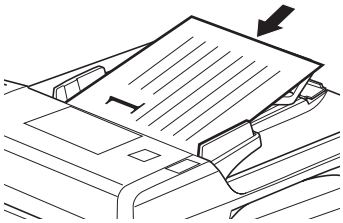	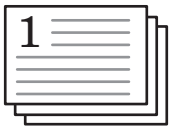

1 Set the original.

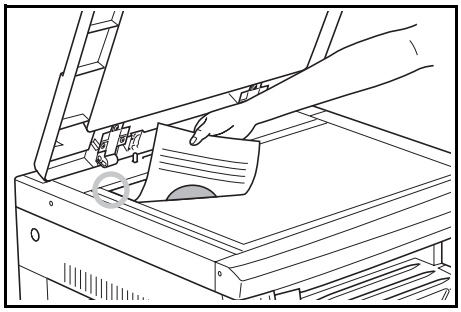

Note

The 4 in 1 layout setting (refer to P.6-26 **"4 in 1 Layout Order"**) and the setting of border lines when setting merge copies (refer to P.6-27 **"Merge Copy Borderline"**) can also be set in the Default Setting Mode.
The value set in the Default Setting Mode will inherit the value that is set at the time when the copy is made.

2 Press the [Combine/Merge Copy] key to light up either the "2 in 1" or "4 in 1" display.

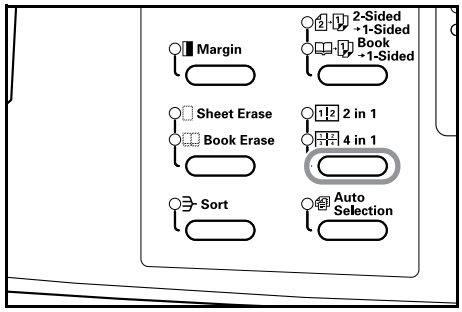

3 Input the number of sets of copies using the keypad.

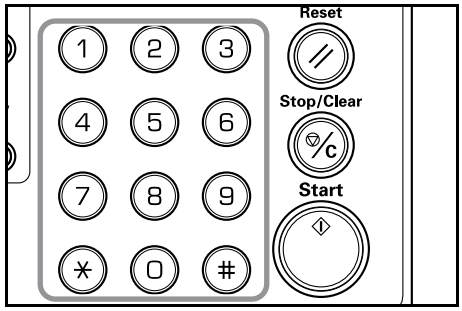

4 Press the [Start] key.
The copier will begin reading in the original.

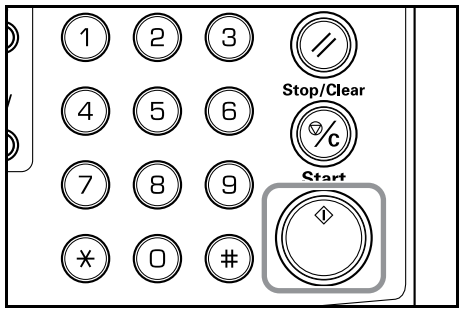

When an original has been set in the optional Document Processor copying will begin automatically.
When the original has been set on the platen and the scanning of the original completed, "1-" (No. of Originals Read In) is displayed and the Combine/Merge Copy display blinks. When this occurs, carry out the following procedure.

Inch specifications **Metric specifications**

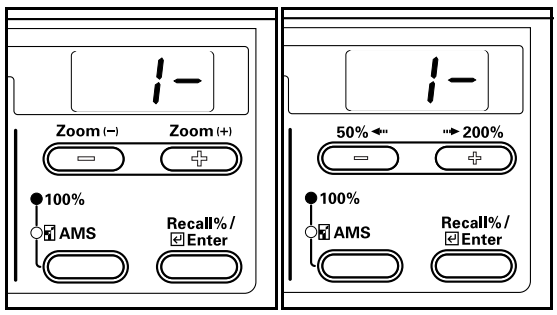

5 Replace the original with the next one and press the [Start] key.
The copier will read in the original.

6 If there are no more originals, press either the [Combine/Merge Copy] key or the [Enter] key. The copier will begin copying.

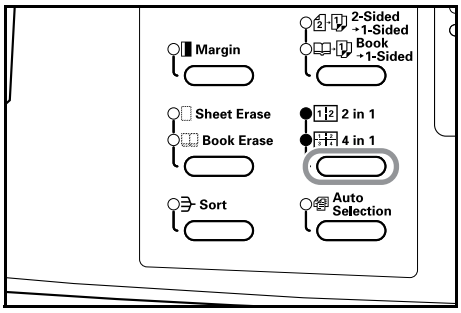

4 in 1 Layout Order

Follow the procedure below to change the order in which pages are to be laid out within the copied page when making 4 in 1 copies.

1 Depress the [Combine/Merge Copy] key for 3 seconds. The Default Settings Mode will be displayed.

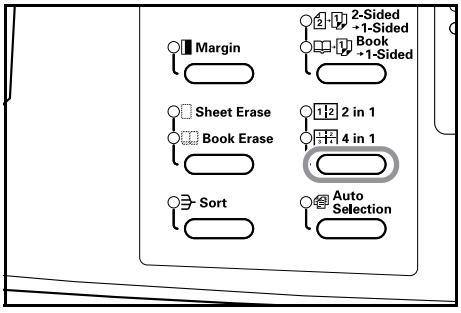

2 Confirm that the "F28 (4 in 1 layout setting)" is displayed and then press the [Enter] key.

Inch specifications **Metric specifications**

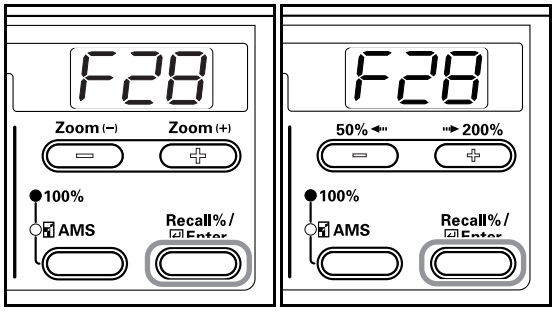

3 Press either the Zoom (+) key or the Zoom **(–)** key and select the layout order from "1-" to "4-".
The order of the layouts displayed is as below.

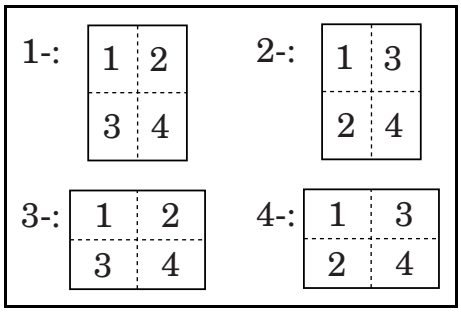

IMPORTANT!
When the orientation is "Portrait" (vertical) select 1 or 2; when it is "Landscape" (horizontal) select 3 or 4.

4 Press the [Enter] key.
The display will blink and copying can be begun.

Inch specifications **Metric specifications**

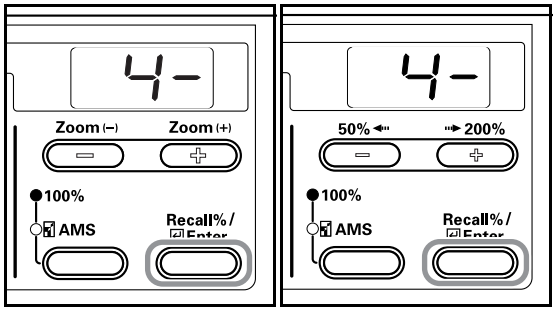

Setting the Merge Copy Border Lines

Use the procedure given below to change the Merge Copy Border Lines.

1 Depress the [Combine/Merge Copy] key for 3 seconds. The Default Settings Mode will be displayed.

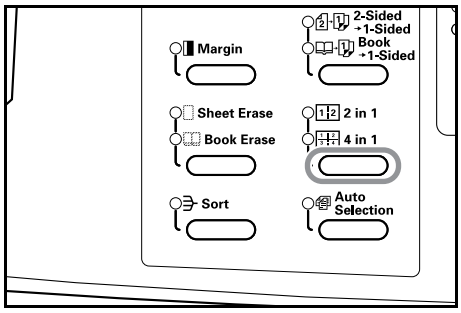

2 Press the Zoom (+) key to display "F29".

Inch specifications **Metric specifications**

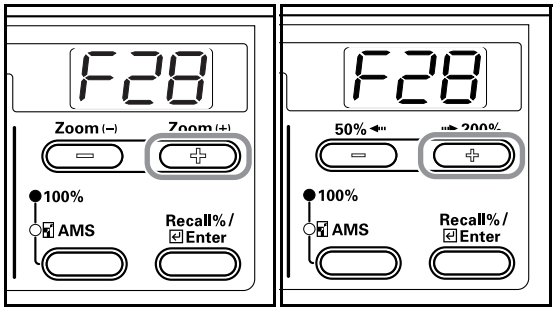

3 Press the [Enter] key.

Inch specifications **Metric specifications**

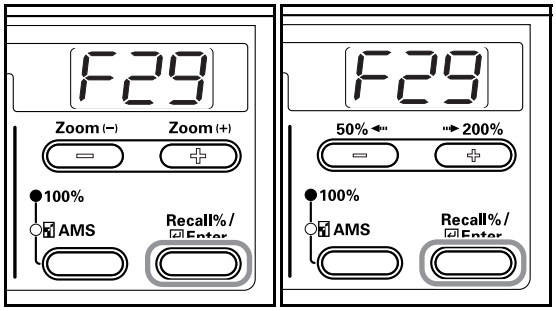

4 Press either the Zoom (+) key or the Zoom **(–)** key and select the type of border line from among "1- (No Border Lines)" to "2- (Solid Line)" and "3- (Dotted Line)".

Inch specifications **Metric specifications**

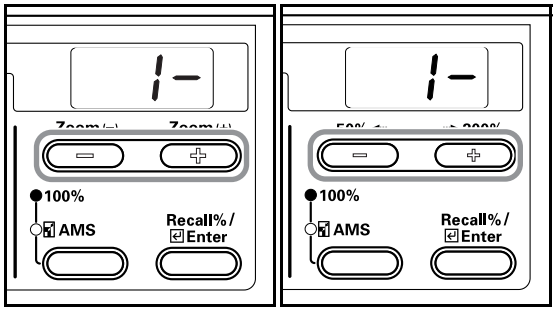

5 Press the [Enter] key.
The display will blink and the copier will return to the state where copying can be continued.

Inch specifications **Metric specifications**

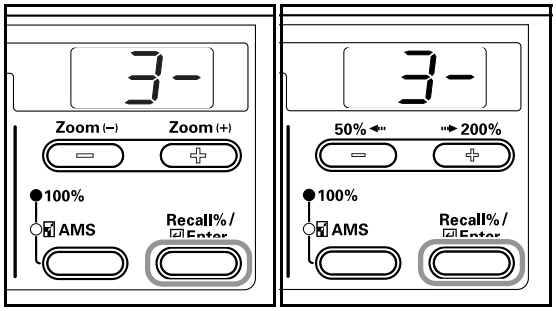

Automatic Sorting of copy sets

It is possible to Sort the number of copy sets needed from multiple sheets of originals.

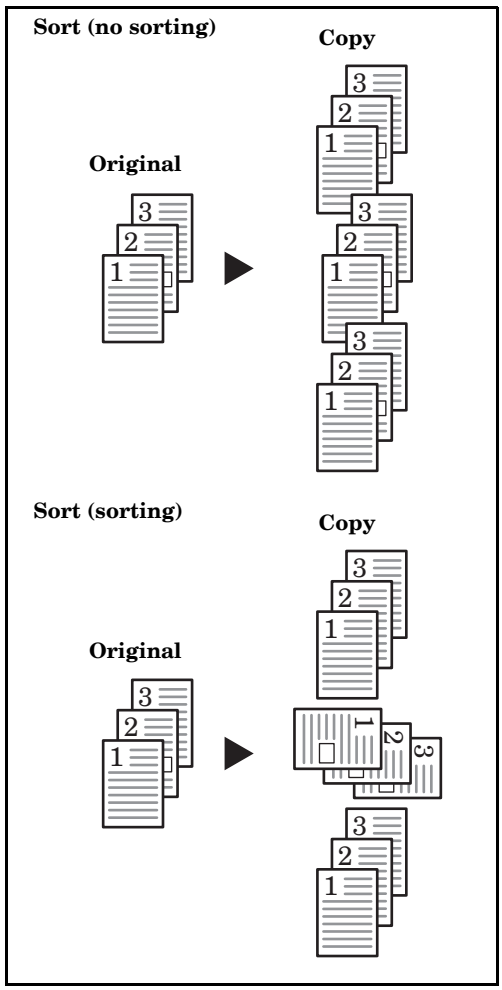

Note
Whether or not to sort while changing the direction for each set at the time of sorting can be changed using the Default Settings Mode. (Refer to P.6-28 **"Rotate Sort Setting"**.)

1 Set the original.

Note
When an original is set in the optional Document Processor, the Sort indicator will light and Sort Copies will be set. In this case, proceed to Step 3.

2 Press the [Sort] key.

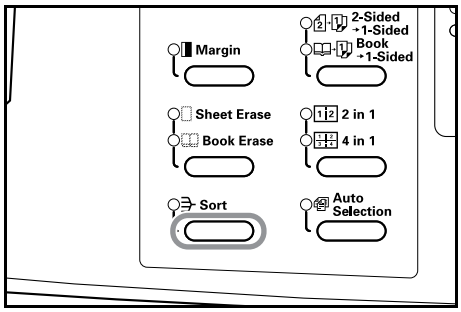

3 Input the number. of sets of copies using the Keypad.

4 Press the [Start] key.
The copier will begin reading in the original.

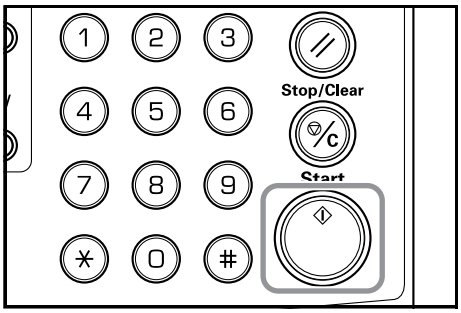

When an original has been set in the optional Document Processor copying will begin automatically.
When the original has been set on the platen and the scanning of the original completed, "1-" (No. of Originals Read In) is displayed and the Sort display blinks. When this occurs, carry out the following procedure.

Inch specifications **Metric specifications**

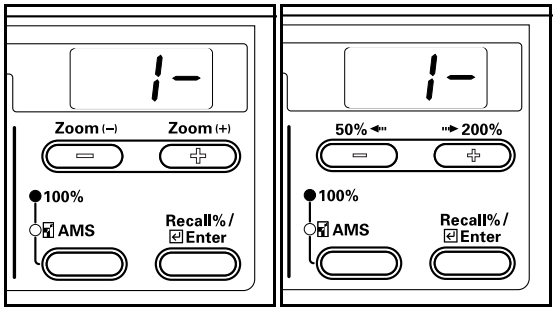

5 Replace the original with the next one and press the [Start] key.
The copier will read in the original.

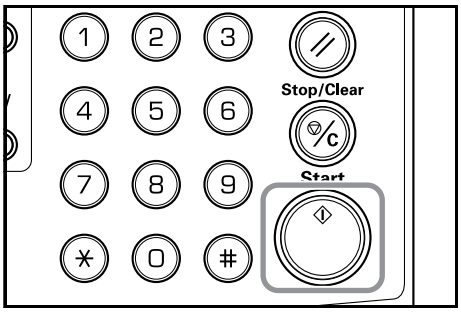

6 If there are no more originals, press either the [Sort] key or the [Enter] key.
The copier will begin copying.

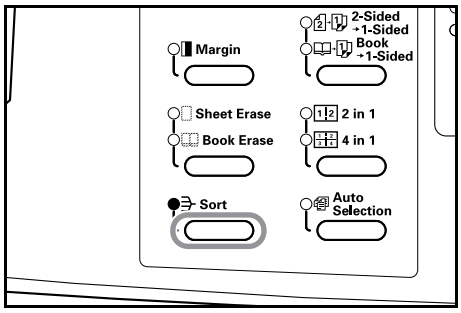

Saving on toner use

Setting Eco-copy will result in a reduced amount of toner being consumed.
Use this to make test copies or copies where high-quality printing is not required. Refer to P.6-13 **"Eco-copy"** for instructions on how to select or deselect Eco-copy in the Default Setting Mode.
* The image will become slightly lighter.

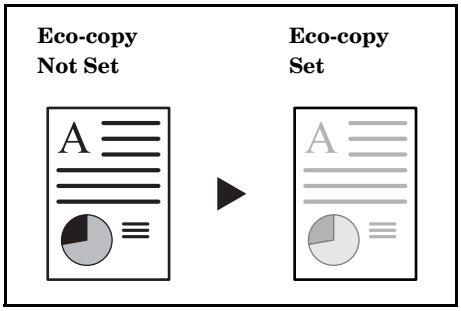

1 Set the original.

2 Press the [Eco-copy] key.

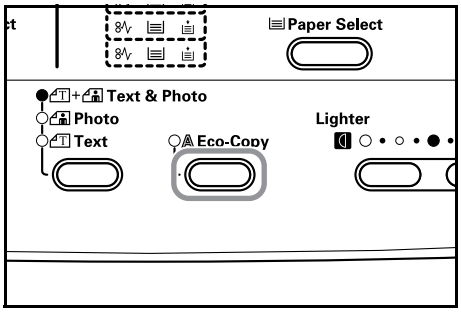

3 Press the [Start] key.
The copier will begin copying.

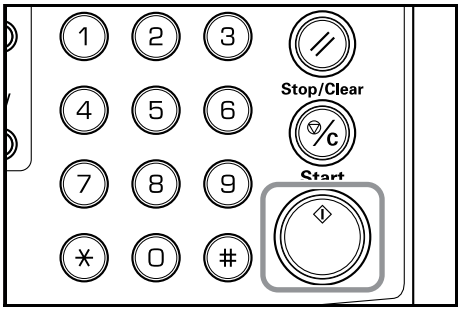

Memorizing frequently used settings: Program Function

Copy settings that are frequently used can be registered and then recalled up by pressing the [Program] key. Even types of copies can be stored.

Registering a program

1 Set the Copy Mode to be registered.

2 Press the [Program] key for 3 seconds.

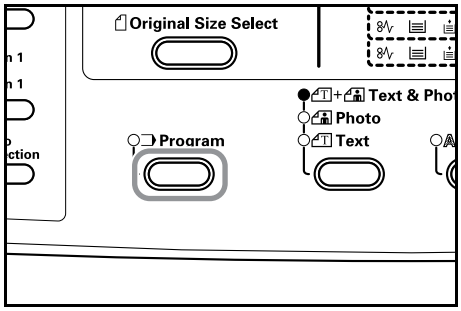

3 Input the program number (0 to 9) using the Keypad and press the key for 3 seconds.
The display of the number input will blink 2 times and the program will be registered.

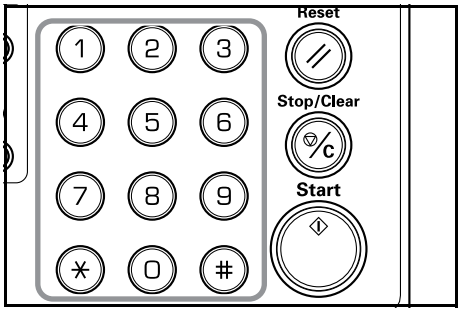

Note
If the same number as a program already registered is input, the prior program is overwritten.

Using programmed setting to make copies

1 Press the [Program] key.

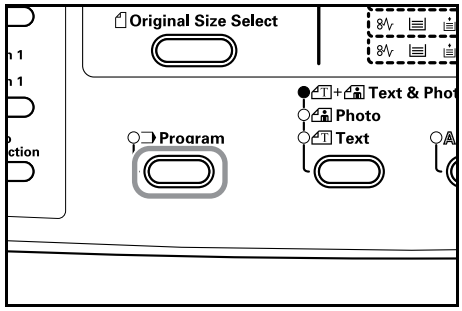

2 Press either the Zoom (+) or Zoom (–) key, select the number of the program to be called and then press the [Enter] key. Input can also be done using the Keypad.

Inch specifications **Metric specifications**

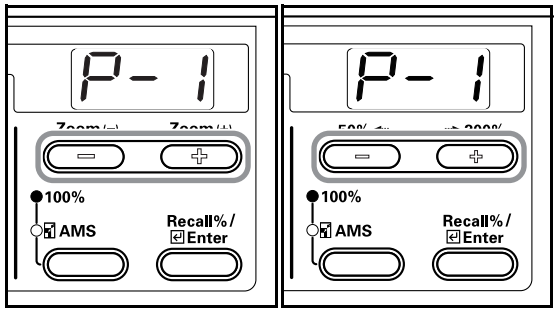

3 Set the original and press the [Start] key.
The copy will be made using the program that has been set.

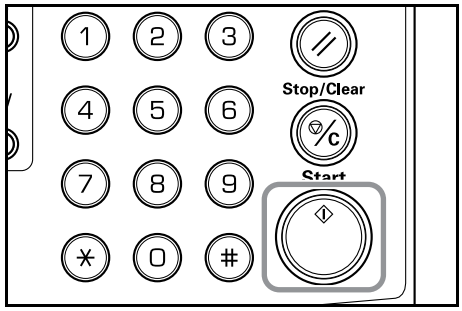

Section 6 COPIER MANAGEMENT

Copy Management Mode

Department Management Modes

The Department Management Mode allows you to manage the number of copies for each department through the setting of the Department Code separately for each department.

This copier has the following features available through the Department Management Code.
- A maximum of 100 Sections can be managed.
- Section Codes can be set from 0 to 99999999 for a maximum of 8 digits.
- The accumulated totals of pages copied according to Section Code can be printed out on paper.

The factory default setting is indicated by an asterisk (*).

Mode Display	Department Management Mode	Description	Available settings	Reference Page
d01	Department Management on/oFF Setting	In order to carry out Department Management, set this to on (set), Set this to oFF (no setting) when Department Management is not needed.	on: Set oFF: No Setting*	6-5
d02	Department Management Code Registration	Registers the Department Management Code up to the line. Up to 100 sections can be registered as Department Management Codes.		6-2
d03	Department Management Code Deletion	Deletes Department Management Codes that will not be used anymore.	yes: Delete no: No Deletion	6-3
d04	Clearing the Department Management Count	Batch-clears the copy count after a set amount of copies have been managed. The counts cannot be deleted separately in accordance with the Department Management Codes.		6-4
d05	Outputting the Department Management List	Outputs the number of copies produced by Section in a report format.		6-5

Department Management Code Operations Procedures

Follow the procedure listed below to operate the [Department Management Mode].

1 Depress both of the Exposure Adjustment keys for 3 seconds while pressing on the [Management] key. “d00 (Department Management Mode)” will be displayed in the No. of Copies display.

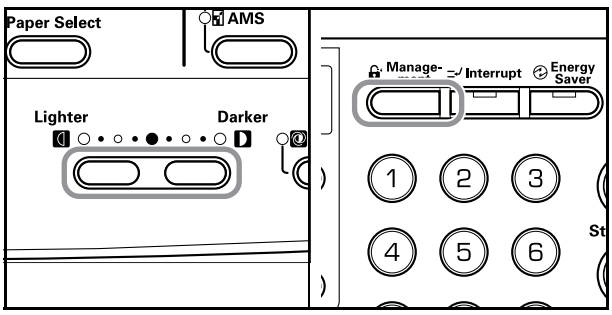

2 Press either the Zoom (+) key or the Zoom **(–)** key and select each of the mode displays.

Inch specifications **Metric specifications**

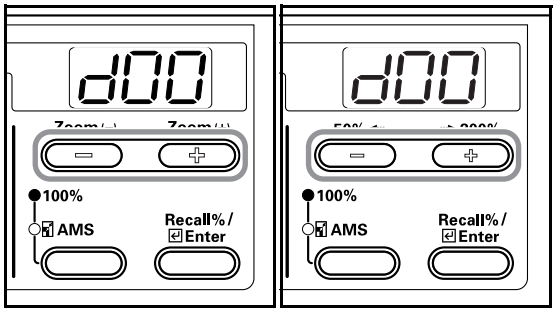

Notes

- Refer to each of the following setting procedures and make the settings.
- Each of the Modes can be selected by pressing the Keypad keys.

3 After completing each setting, press on the Zoom (+) or Zoom **(–)** key to display "d00".

Inch specifications **Metric specifications**

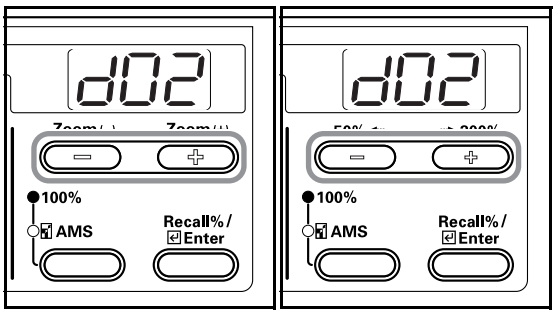

4 Press the [Enter] key. The mode display will return to the No. of Copies display.

Inch specifications **Metric specifications**

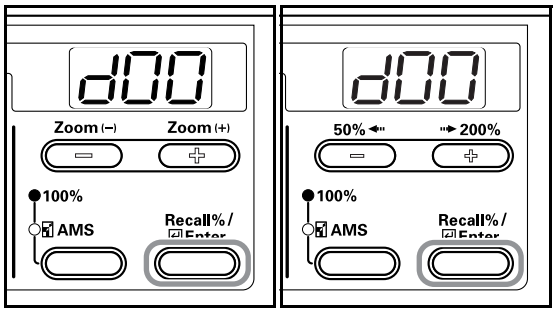

Department Code Registration

A Department Code of up to 8 digits can be entered.

1 Display the Department Management Code. (Refer to P.6-1 **"Department Management Code Operations Procedures"**.)

Inch specifications **Metric specifications**

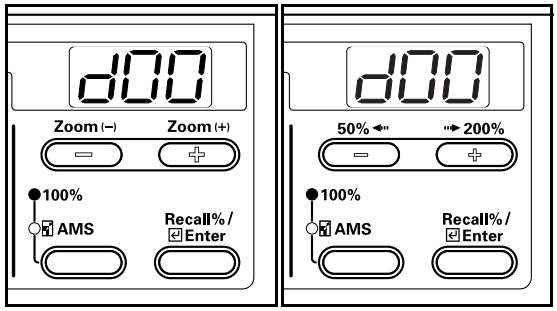

2 Press either the Zoom (+) or Zoom **(–)** key to display "d02".

Inch specifications **Metric specifications**

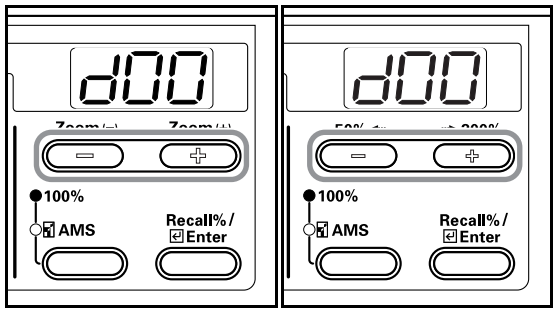

3 Press the [Enter] key. "- - -" will be displayed.

Inch specifications **Metric specifications**

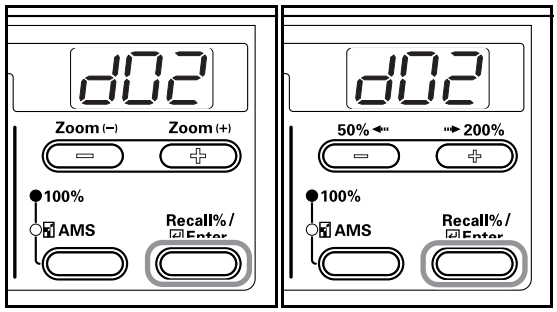

4 Input the Department Code to be registered (up to a maximum of 8 digits) using the Keypad.
Number from 0 to 99999999 can be input.

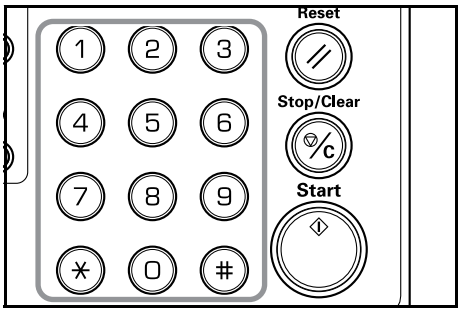

Note
If a mistake is made during input it can be cleared by pressing the [Stop/Clear] key and the value reentered.

5 Press the [Enter] key. The code that was input will flash on and off.

Inch specifications **Metric specifications**

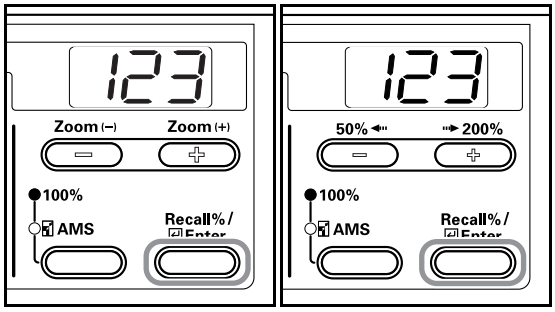

6 After confirming the code that was input, press the [Enter] key.
The display will return to that of Step 2.

Inch specifications **Metric specifications**

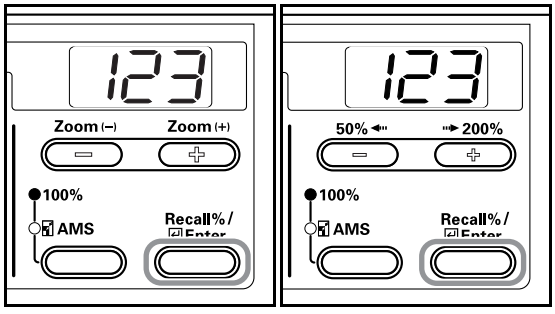

Note
If an existing Department Code is attempted to be registered, an error will occur and "- - -" will flash intermittently in the No. of Copies display. In this case, register a different Department Code.

Deleting Department Codes

Deleting a registered Department Code.

1 Display the Department Management Code.
(Refer to P.6-1 **"Department Management Code Operations Procedures"**.)

Inch specifications **Metric specifications**

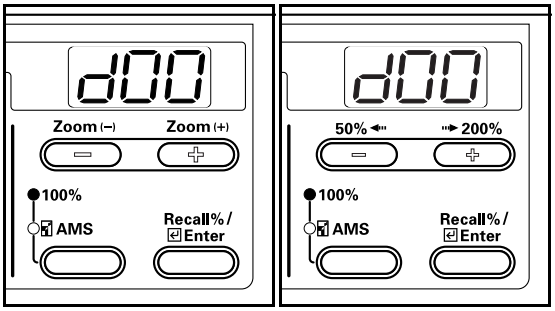

2 Press either the Zoom (+) or Zoom **(–)** key to display "d03".

Inch specifications **Metric specifications**

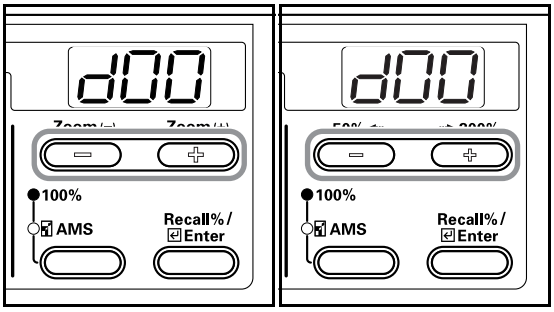

3 Press the [Enter] key.

Inch specifications **Metric specifications**

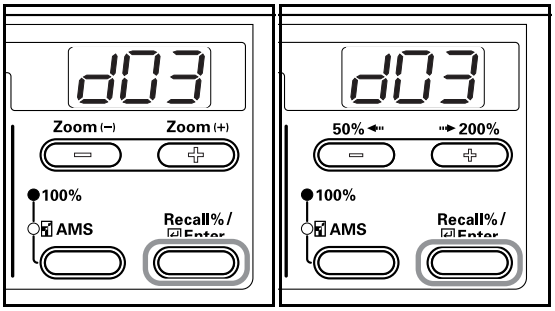

4 Input the Department Code to be deleted using the Keypad and then press the [Enter] key.

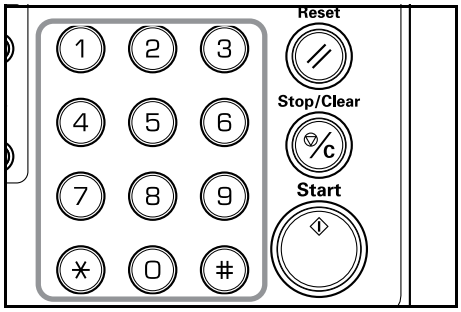

Note
If a mistake is made during input it can be cleared by pressing the [Stop/Clear] key and the value reentered.

5 Confirm the code to be deleted and then press the [Enter] key.

6 Press either the Zoom (+) key or the Zoom **(–)** key and select "yes". To cancel delection, select "no".

Inch specifications **Metric specifications**

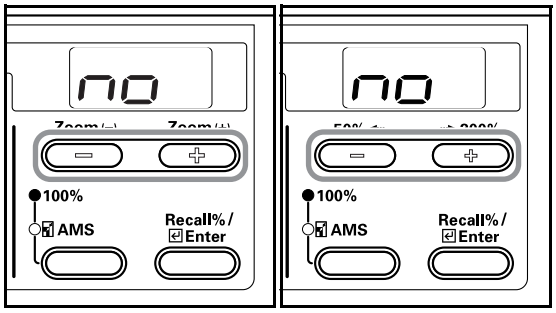

7 Press the [Enter] key.
The display will return to that of Step 2.

Inch specifications **Metric specifications**

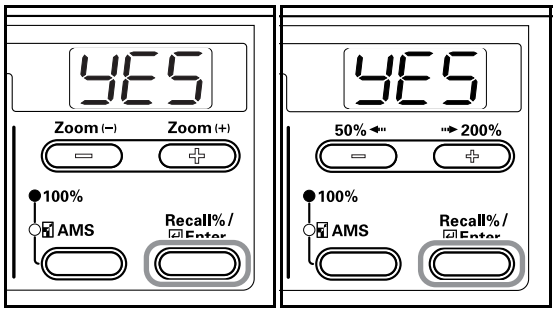

Clearing the Department Management Count

The Total No. of Copies Count for all sections can be cleared.

1 Display the Department Management Code.
(Refer to P.6-1 **"Department Management Code Operations Procedures"**.)

Inch specifications **Metric specifications**

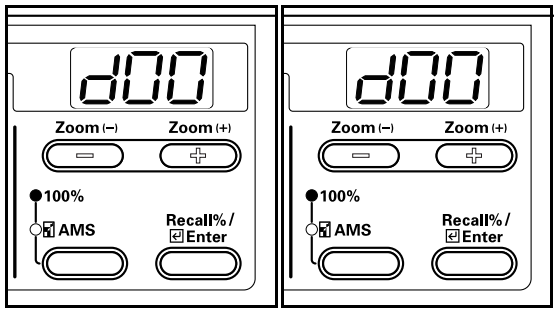

2 Press either the Zoom (+) or Zoom **(–)** key to display "d04".

Inch specifications **Metric specifications**

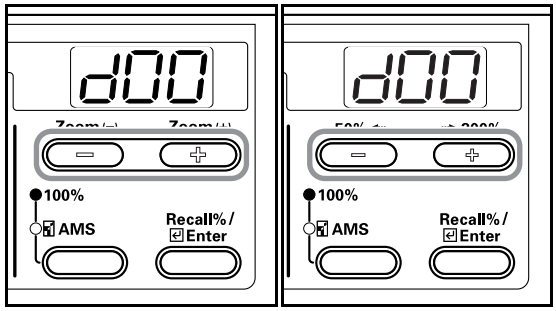

3 Press the [Enter] key.

Inch specifications **Metric specifications**

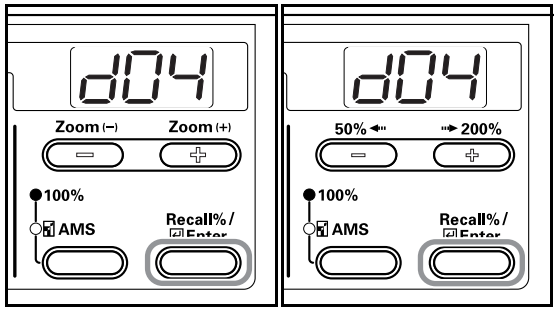

4 Press the Zoom (+) key and select "yes". To cancel the clearing of the count, select "no".

Inch specifications **Metric specifications**

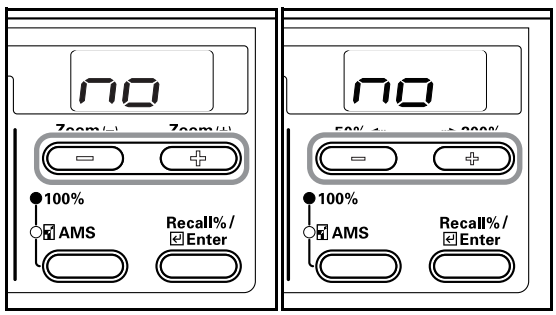

5 Press the [Enter] key.
The counter will be cleared and the display will return to that of Step 2.

Outputting the Department Management List

The Total No. of Copies by section can be output.

1 Display the Department Management Code.
(Refer to P.6-1 **"Department Management Code Operations Procedures"**.)

Inch specifications **Metric specifications**

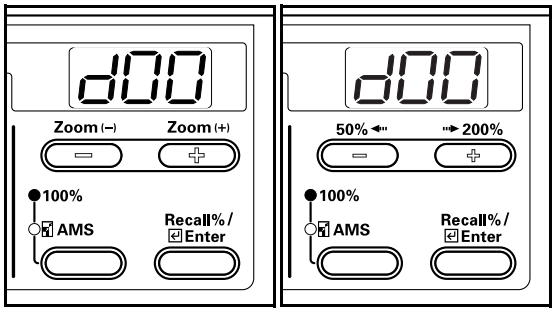

2 Press either the Zoom (+) or Zoom **(–)** key to display "d05".

Inch specifications **Metric specifications**

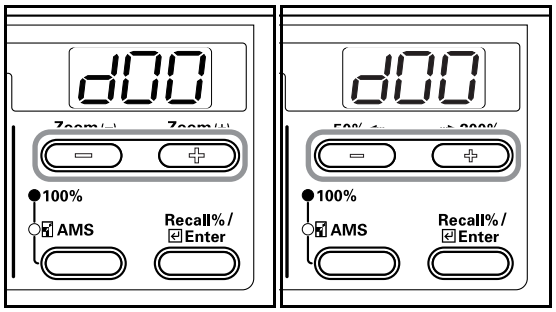

Note
Check to make sure that 11" × 8 1/2"/A4 size paper is loaded in the drawer.

3 Press the [Enter] key.
The list will be output and the display will return to that of Step 2.

Inch specifications **Metric specifications**

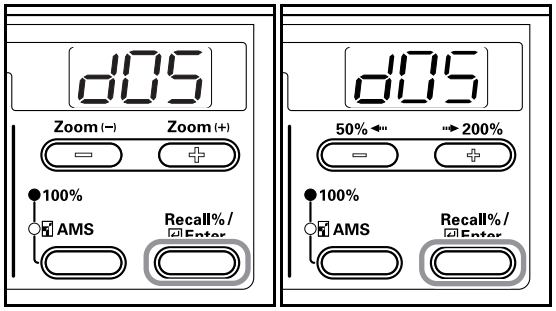

Sample: Department Management List

===== DEPT. COUNT REPORT =====

DEPT. Total 100

DEPT. NO.	COPY COUNT	DEPT. NO.	COPY COUNT
1	0	55	0
2	0	56	0
3	0	57	0
4	0	58	0
5	0	59	0
6	0	60	0
7	0	61	0
8	0	62	0
9	0	63	0
11	0	64	0
12	0	65	0
13	0	66	0
14	0	67	0
15	0	68	0
16	0	69	0
17	0	70	0
18	10	71	0
19	0	72	0
20	0	73	0
21	0	74	0
22	0	75	0
23	0	76	0
24	0	77	0
25	0	78	0
26	0	79	0
27	0	80	0
28	0	81	0
29	10	82	0
31	0	83	0
32	0	84	0
33	0	85	0
34	0	86	0
35	0	87	0
36	0	88	0
37	0	89	0
38	0	90	0
39	0	91	0
41	0	92	0
42	0	93	0
43	0	94	0
44	0	95	0
45	0	97	0
46	0	98	0
47	0	99	0
48	0	0000	0
49	0	00010	0
51	0	000020	0
52	0	0000030	0
53	0	00000005	0
54	0	00000040	0

COPY COUNT TOTAL 3

How to set the Department Management Mode

Set Department Management to enable or disable it.

1 Display the Department Management Code.
(Refer to P.6-1 **"Department Management Code Operations Procedures"**.)

Inch specifications **Metric specifications**

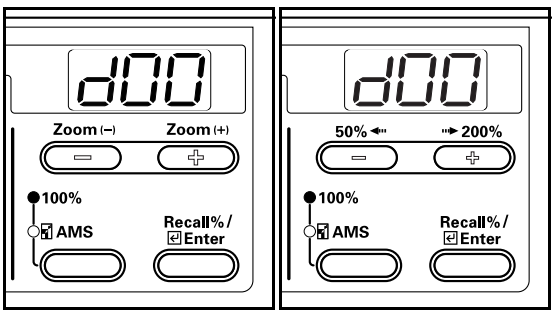

2 Press either the Zoom (+) or Zoom **(–)** key to display "d01".

Inch specifications **Metric specifications**

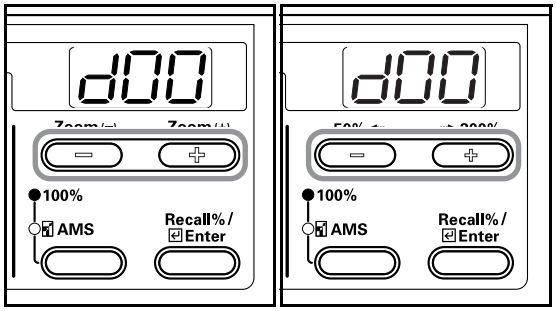

3 Press the [Enter] key.

Inch specifications **Metric specifications**

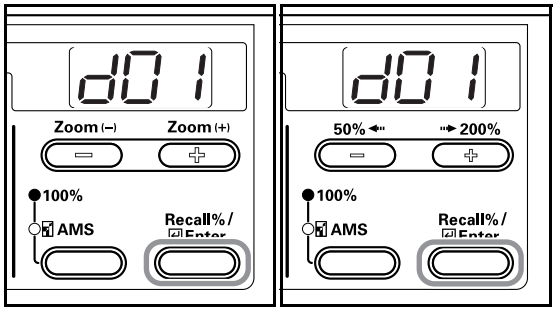

4 Press either the Zoom (+) or Zoom **(–)** key and select "on" when Department Management is to be used and "oFF" when it will not be used.

Inch specifications **Metric specifications**

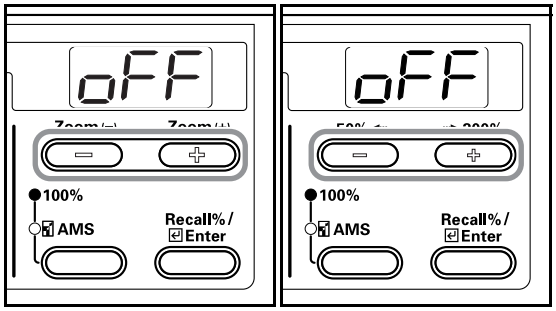

5 Press the [Enter] key.
The display will return to that of Step 2.

Inch specifications **Metric specifications**

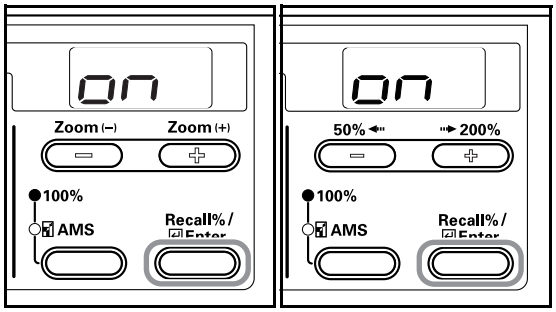

Making copies when the copier is in the Department Management Mode

When Department Management is being carried out "= = =" will be displayed in the No. of Copies display and copy operations can be carried out by entering the assigned Department Codes using the Keypad.

IMPORTANT!
Always remember to press the [Management] key after completing copying.

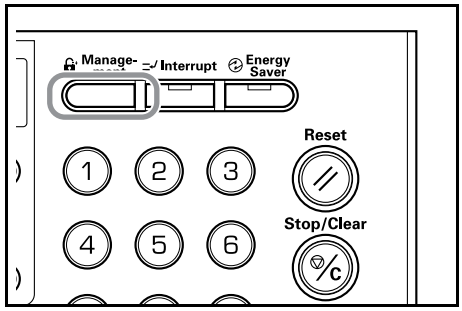

1 Confirm the code to be deleted and then press the [Enter] key.
"1" will be displayed on the No. of Copies display.

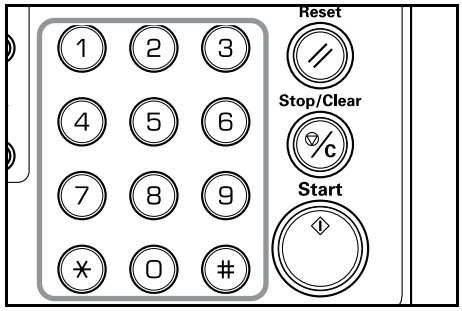

Notes

- When an error has been made in input, press the [Stop/Clear] key and input the data again.
- When the Department Code that is input does not match any of the Department Codes registered, the copier returns to the "= = =" display. Input the correct Department Code.

2 Carry out regular copy operations.

3 Press the [Management] key after completing copying.
"= = =" will be displayed on the No. of Copies display.

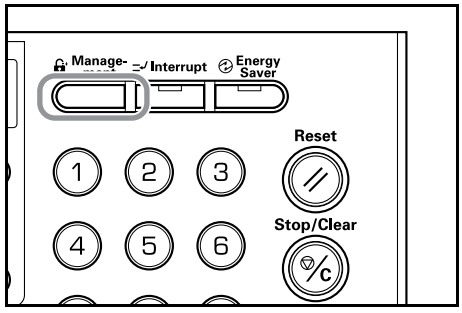

Default Setting Mode

The copier will enter Default Setting Mode after warm up has been completed or when the [Stop/Reset] key has been pressed. The settings automatically set for the copier in Default Setting Mode are called the Default Settings. These settings can be freely changed to match the usage of the copier.

Default Settings Items

The following are the Default Settings Items.
Change the settings as necessary in order to achieve the most efficient use of the copier. The factory default setting is indicated by an asterisk (*).

Display Items	Settings Items	Description	Available settings	Reference Page
F01	User Status Report	Outputs the content of the Default Settings.	---	6-11
F02	Original Image Quality	Sets the manuscript image quality that will be selected at the time the copier is turned on.	1-: Text & Photo 2-: Photo 3-: Text	6-12
F03	Exposure Mode	Sets the copy exposure at the time the copier is turned on to Manual or Automatic. * There will be no display when Photo has been selected in F02.	1-: Manual* 2-: Automatic	6-13
F04	Eco-copy	Selects the initial value of the Eco-copy Mode when the power is turned on. The initial value of the Eco Mode can be set to on (Enable). Exposures will be lighter and less toner will be consumed when the Eco-copy Mode is used.	on: Enabled oFF: Disabled*	6-13
F05	Exposure Steps	Changes the number of the adjustment steps for the copy's exposure. 0.5 - Setting this step enables even finer adjustment of the exposure.	1-: 1 step* 2-: 0.5 step	6-14
F06	Auto Exposure Adjustment	Adjusts the overall exposure of the copy when Auto Exposure Mode is used.	1-(lightest) to 7-(darkest) (*4-)	6-14
F07	Text & Photo Mode Exposure Adjustment	Adjusts the central exposure value for the copier's manual exposure (Text and Photo).	1-(lightest) to 7-(darkest) (*4-)	6-15
F08	Photo Exposure Adjustment	Adjusts the central exposure value for the copier's manual exposure (Photo).	1-(lightest) to 7-(darkest) (*4-)	6-16
F09	Text Adjustment Exposure	Adjusts the central exposure value for the copier's manual exposure (Text).	1-(lightest) to 7-(darkest) (*4-)	6-16
F10	Processing to Reduce Black Streaks	It is possible to make black streaking less noticeable when it appears when using the optional Document Processor.	1-: OFF* 2-: Weak 3-: Strong	6-17
F11	Photo Processing	Setting this to Error Diffusion when copying originals with text and photos and Dithering when copying originals with mainly photos will result in clearer images.	1-: Error Diffusion* 2-: Dithering	6-18
F12	Back Ground Adjustment	The ground color can be lightened when it is found to be too dark after copying.	1-(lightest) to 5-(darkest) (*3-)	6-18

Display Items	Settings Items	Description	Available settings	Reference Page
F13	Drawer Selection	Selects whether the drawer with the same size of paper as the manuscript size will be automatically selected or whether a selected drawer level is to be used.	1-: Automatic Paper Selection* 2-: Selected Drawer	6-19
F14	Selected Drawer	Selects the drawer that is to be automatically be given priority for use. * Manual paper feeding cannot be set using the Selected Drawer function. * Drawers 2 to 4 will be displayed only when the optional Paper Feeder is installed.	1-: Drawer 1* 2-: Drawer 2 3-: Drawer 3 4-: Drawer 4	6-20
F15	Auto Drawer Switching	Switches feeding over automatically to a drawer holding paper of the same size/orientation and copying continues when the paper in the drawer being used runs out. * This will be displayed when the optional Paper Feeder is installed.	on: Enabled* oFF: Disabled	6-20
F16	Auto Sizing	Sets whether or not to use automatic magnification (zoom/reduction percentage) when a paper drawer has been selected.	on: Enabled oFF: Disabled*	6-21
F17	Drawer Paper Size (Drawer 1)	Automatically detects the paper size in the supply drawers (1 - 4). When it is to be detected in inches, set this to AtI (automatic detection in inch units); when paper size is to be detected in centimeters, (A·B columns) set this to AtC (automatic detection in centimeter units) and when Oficio Ⅱ size is to be used set this to o2r. * Drawers 2, 3 and 4 will be displayed only when the optional Paper Feeder is installed.	AtI: Automatic Detection in Inch units (*AtI: Inch specifications) AtC: Automatic Detection in centimeter units (A·B columns) (*Atc: Metric specifications) o2r: Oficio Ⅱ	6-21
F18	Drawer Paper Size (Drawer 2)			
F19	Drawer Paper Size (Drawer 3)			
F20	Drawer Paper Size (Drawer 4)			
F21	Multi-bypass Tray Paper Size	Sets the size of paper to be manually fed in. * When using Custom 1 or 2, set the paper size using F22 and F23.	**[Inch specifications]** UnI: Universal Size* Ldr: Ledger Horizontal LGr: Legal Horizontal Ltr: Letter Horizontal LtE: Letter Vertical Str: Statement Horizontal Cu1: Custom 1 Cu2: Custom 2 **[Metric specifications]** UnI: Universal Size* A3r: A3 Horizontal A4r: A4 Horizontal A4E: A4 Vertical A5r: A5 Horizontal b4r: B4 Horizontal b5r: B5 Horizontal For: Folio Horizontal Cu1: Custom 1 Cu2: Custom 2	6-22

Display Items	Settings Items	Description	Available settings	Reference Page
F22	Custom 1 Size	Sets the size to be set to the Custom size (1 - 2). * This makes it possible to set the size that do not appear on the operation panel.	**[Inch specifications]** A3r: A3 Horizontal A4r: A4 Horizontal A4E: A4 Vertical A5r: A5 Horizontal b4r: B4 Horizontal b5r: B5 Horizontal b5E: B5 Vertical b6r: B6 Horizontal* A6r: A6 Horizontal PoS: Postcard For: Folio Horizontal o2r: Oficio Ⅱ CPF: 11" × 15" Horizontal InP: Irregular Size YYY × XXX (") Y-direction: 3.88 - 11.33" X-direction: 5.88 - 17" **[Metric specifications]** b6r: B6 Horizontal* A6r: A6 Horizontal Pos: Postcard Ldr: Ledger Horizontal LGr: Legal Horizontal Ltr: Letter Horizontal LtE: Letter Vertical Str: Statement Horizontal o2r: Oficio Ⅱ CPF: 11" × 15" Horizontal InP: Irregular Size YYY × XXX (mm) Y-direction: 98 - 297mm X-direction: 148 - 432mm	6-23
F23	Custom 2 Size			
F24	Copy Limit	Limits the number of copies or sets of copies that can be made at one time.	1 - 250 (*250)	6-24
F25	2-Sided Copy Reverse-side Rotation Setting	Rotates the paper 180 degrees and copies it when both sides of a sheet are to be copied. * This will not be displayed when the optional Duplex Unit is not installed.	on: Rotate oFF: No Rotation*	6-24
F26	Margin Shift	Sets the initial value for the Binding Margin.	**[Inch specifications]** 0.13/0.25/0.38/0.50/0.63/0.75 (") (*0.25) **[Metric specifications]** 1 - 18 (mm) (*6)	6-25
F27	Border Width	Sets the initial value for the border width that will be lightened to remove shadows from the sheet or book.	**[Inch specifications]** 0.13/0.25/0.38/0.50/0.63/0.75 (") (*0.25) **[Metric specifications]** 1 - 18 (mm) (*6)	6-26
F28	4 in 1 Layout Setting	Sets the layout for the order in which the originals will appear in the 4-in-1 Layout mode.	1-: 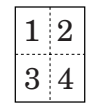 2-: 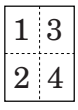 3-: 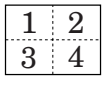 4-: 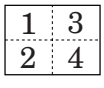 (*1-)	6-26

Display Items	Settings Items	Description	Available settings	Reference Page
F29	Merge Copy Borderline	Selects the type of borderline to be used in the Layout mode.	1-: No Borderline* 2-: Solid Line 3-: Dotted Line	6-27
F30	Rotate Sort Setting	Sets the copier so that each copy set is rotated and sorted when it is sort-copied.	on: Rotational Sorting Enabled oFF: Rotational Sorting Disabled*	6-28
F31	Silent Mode Transition Time	Shortens the amount of time the internal motor continues to run after the copy is produced. Use this setting in cases when the motor noise is bothersome.	0, 5, 10, 15, 30 (seconds) (*10)	6-28
F32	Auto Clear Setting	Sets the copier so that automatic clearing is executed after a set amount of time has elapsed after the copy is produced. (Refer to P.2-4 **"Regarding the Auto-clear function"**.)	on: Enabled* oFF: Disabled	6-29
F33	Auto Off Setting	The Auto Off mode will be entered after a set period of time has passed after the final copy has been produced or during which no operations have been performed. If the Auto Off function interferes with your copy operations, disable the function. Before disabling the Auto Off function, you may want to try lengthening the amount of time before the Auto Off function engages (Off Mode Transition Time).	on: Enabled* oFF: Disabled	6-29
F34	Auto Clear Time	Sets the time interval prior to the automatic operation of the Auto Clear function when on (Enable) has been selected as the Auto Clear setting. * This will not be displayed when F32 is set to “oFF”.	10 - 270 (10-second units) (*90)	6-30
F35	Low Power Mode Transition Time	Sets the time interval prior to the automatic engagement of the Low Power mode after copy operations have been completed.	1, 5, 15, 30, 45, 60, 90, 120, 180, 240 (minutes) (*15)	6-31
F36	Off Mode Transition Time	Sets the time interval prior to the automatic operation of the Auto Clear function when on (Enable) has been selected as the Auto Clear setting. * This will not be displayed when F33 is set to “oFF”.	1, 5, 15, 30, 45, 60, 90, 120, 180, 240 (minutes) (*30)	6-31
F37	Alarm	The Alarm can be set to sound when a key on the Operation Panel is pressed or in cases when errors occur, etc.	on: Enabled (sound alarm) oFF: Disabled (no alarm)*	6-32
F38	Toner Coverage Report	Prints out a report that shows the number of copies made and the average amount of toner used (blackness ratio %) for each paper size.	---	6-33

Default Settings Mode Operations Procedures

Follow the procedure listed below to operate in the [Default Settings Mode].

1 Depress the [Exposure Adjustment] keys on both sides for 3 seconds. "F00 (Default Settings Mode)" will be displayed in the No. of Copies display.

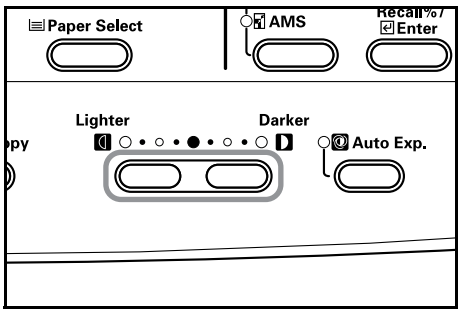

2 Press either the Zoom (+) key or the Zoom **(–)** key and select each Default Settings Mode.

Inch specifications **Metric specifications**

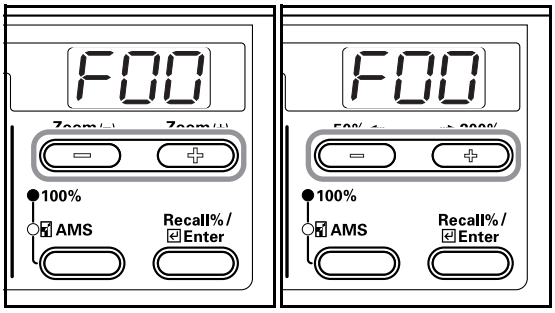

Notes
- Each of the Default Setting Modes can be selected by pressing the Keypad keys.
- Refer to **"Procedure for Changing the Default Settings"** regarding the following.

3 After completing each operation, press on the Zoom (+) or Zoom **(–)** key to display "F00".

Inch specifications **Metric specifications**

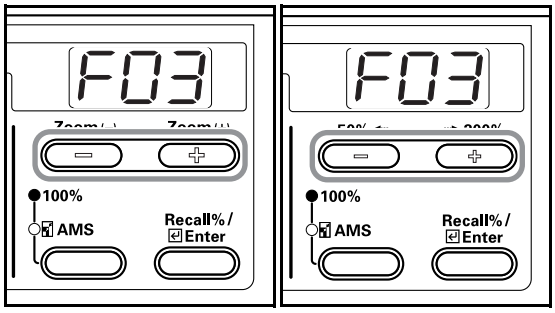

4 Press the [Enter] key. The mode display will return to the No. of Copies display.

Inch specifications **Metric specifications**

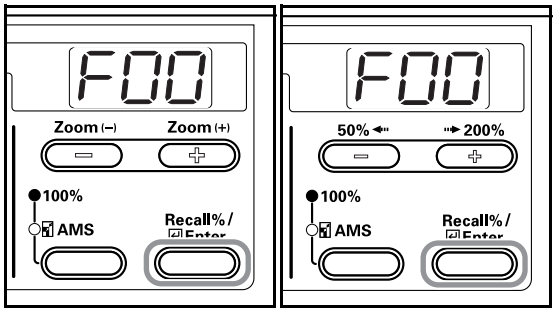

Procedure for Changing the Default Settings

The procedure for changing each of the items in the Default Settings is described below.

User Status Report

Outputs a list of the values set for the Default Settings items.

Note
Check to make sure that 11" × 8 1/2"/A4 size paper is loaded in the drawer.

1 Display the Default Settings Mode. (Refer to P.6-11 **"Default Settings Mode Operations Procedures"**.)

Inch specifications **Metric specifications**

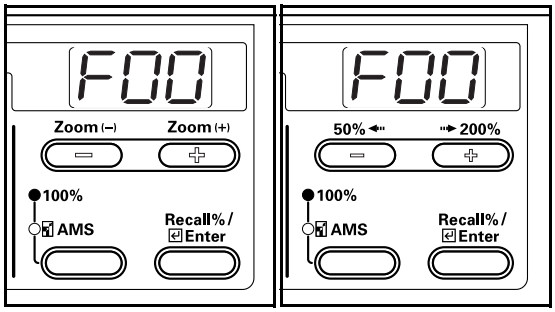

2 Press either the Zoom (+) or Zoom **(–)** key to display "F01".

Inch specifications **Metric specifications**

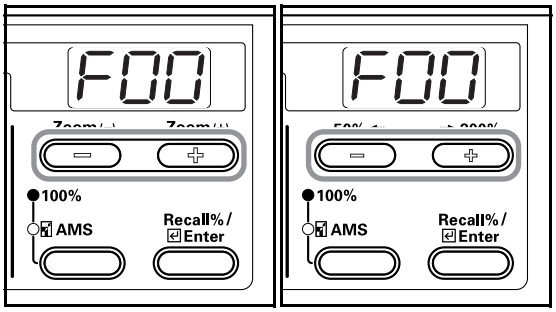

3 Press the [Enter] key. The report will be output.

Inch specifications **Metric specifications**

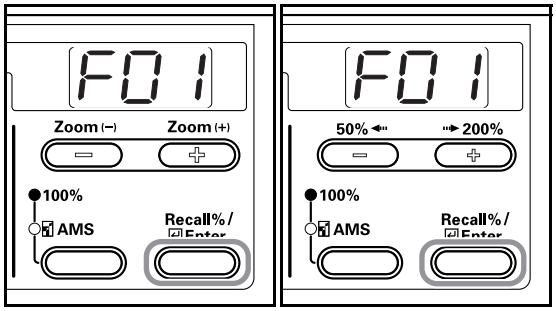

Sample: User Status Report

```
===== USER COPY SETTING LIST =====
-----------------------------------------------------------------
F00 : [ - - - - ] User Setting Mode Exit
F01 : [ - - - - ] User Setting List Out
F02 : [     1 ] Default Image Mode     (1:Text&Photo, 2:Photo, 3:Text)
F03 : [     1 ] Default Density Set    (1:Manual, 2:AUTO)
F04 : [   off ] Default Draft Mode Set (on, off)
F05 : [     2 ] Density Step           (1:1 step, 2:0.5 step)
F06 : [     4 ] AE Adjustment                (1:Lighter, - - - - - - - - -, 7:Darker)
F07 : [     4 ] Text&Photo Orig. density Set (1:Lighter, - - - - - - - - -, 7:Darker)
F08 : [     4 ] Photo Orig. density Set      (1:Lighter, - - - - - - - - -, 7:Darker)
F09 : [     4 ] Text Orig. density Set       (1:Lighter, - - - - - - - - -, 7:Darker)
F10 : [     1 ] Correct. Fine Black Line     (1:Off, 2:Weak, 3:Strong)
F11 : [     1 ] Photo Mode           (1: Error diffusion, 2:Dithering)
F12 : [     3 ] Background exp. Adjustment   (1:Lighter, - - - - - - - - - , 5: Darker)
F13 : [     1 ] Default Paper Selection (1:Auto Paper Selection, 2:Default Cassette)
F14 : [     1 ] Default Cassette       (1:Cassette 1, 2:Cassette 2, 3:Cassette 3, 4:Cassette 4)
F15 : [    on ] Auto Cassette Change  (on, off)
F16 : [   off ] Default Auto Zoom      (on, off)
F17 : [   AtC] Cassette 1 Size (AtC:Auto Select Centi, AtI:Auto Select Inch, o2r:Oficio2)
F18 : [   AtC] Cassette 2 Size (AtC:Auto Select Centi, AtI:Auto Select Inch, o2r:Oficio2)
F19 : [   AtC] Cassette 3 Size (AtC:Auto Select Centi, AtI:Auto Select Inch, o2r:Oficio2)
F20 : [   AtC] Cassette 4 Size (AtC:Auto Select Centi, AtI:Auto Select Inch, o2r:Oficio2)
F21 : [   UnI] Bypass Size     (UnI:Universal Size, A3r:A3R, A4r:A4R, A4E:A4E, A5r:A5R,
                                b4r:B4R, b5r:B5R, For:Folio, Cu1:CUSTOM1, Cu2:CUSTOM2)
F22 : [   b6r ] Custom Size 1  (b5E:B5E, b6r:B6R, A6r:A6R, PoS:POST, Ldr:Ledger,
      [ - - - - mm]            Lgr:Legal, Ltr:LetterR, LtE:LetterE, Str:Statement,
      [ - - - - mm]            o2r:Oficio2, CPF:Computer Form, InP:Input paper size)
F23 : [   b6r ] Custom Size 2  (b5E:B5E, b6r:B6R, A6r:A6R, PoS:POST, Ldr:Ledger,
      [ - - - - mm]            Lgr:Legal, Ltr:LetterR, LtE:LetterE, Str:Statement,
      [ - - - - mm]            o2r:Oficio2, CPF:Computer Form, InP:Input paper size)
F24 : [   250 ] Limited Number of Copies   (1-250)
F25 : [   off ] Duplex Copy Rotate Back    (on, off)
F26 : [     6 ] Margin Width               (1~18mm)
F27 : [     6 ] Border Erase Width         (1~18mm)
F28 : [     1 ] 4in1 Collective Copy       (1:PORTRAIT Left to Right and Down,
                                            2:PORTRAIT Top to Bottom and Right,
                                            3:LANDSCAPE Left to Right and Down,
                                            4:LANDSCAPE Top to Bottom and Right)
F29 : [     1 ] Boundary Line              (1:NON, 2:SOLID, 3:DOTTED)
F30 : [   off ] Rotate Sort                (on, off)
F31 : [    10 ] Silent Mode                (0, 5, 10, 15, 30 Sec)
F32 : [    on ] Auto Clear                 (on, off)
F33 : [    on ] Auto Off Mode              (on, off)
F34 : [   120 ] Auto Clear Time            (10~270 Sec (10 Sec))
F35 : [     1 ] Auto Low Power Mode Time   (1, 5, 15, 30, 45, 60, 90, 120, 180, 240 Min)
F36 : [    15 ] Auto Off Mode Time         (1, 5, 15, 30, 45, 60, 90, 120, 180, 240 Min)
```

Original Image Quality

Sets the original image quality that will be selected at the time the copier is turned on.

1 Display the Default Settings Mode.
(Refer to P.6-11 **"Default Settings Mode Operations Procedures"**.)

Inch specifications **Metric specifications**

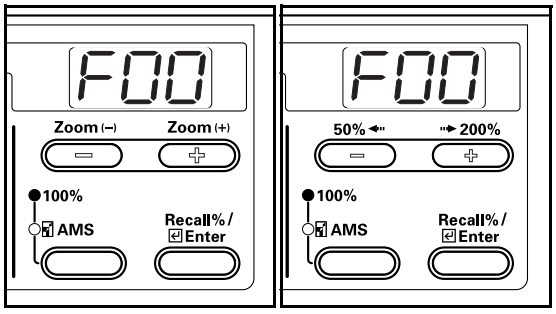

2 Press either the Zoom (+) or Zoom (–) key to display "F02".

Inch specifications **Metric specifications**

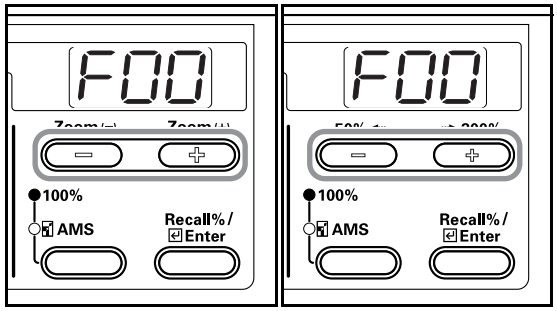

3 Press the [Enter] key.

Inch specifications **Metric specifications**

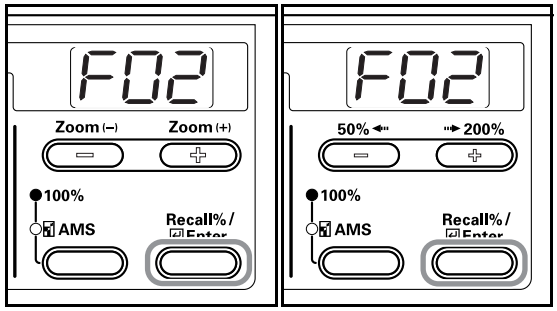

4 Press either the Zoom (+) key or the Zoom (–) key and select "1- (Text + Photos)", "2- (Photos)" or "3- (Text)".

Inch specifications **Metric specifications**

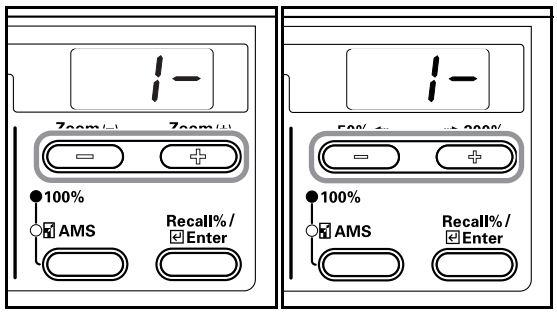

5 Press the [Enter] key.
The display will return to that of Step 2.

Inch specifications **Metric specifications**

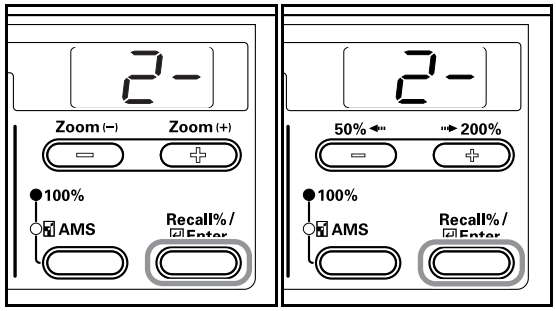

Exposure Mode

Sets the copy exposure at the time the copier is turned on to Manual or Automatic.

1 Display the Default Settings Mode. (Refer to P.6-11 **"Default Settings Mode Operations Procedures"**.)

Inch specifications **Metric specifications**

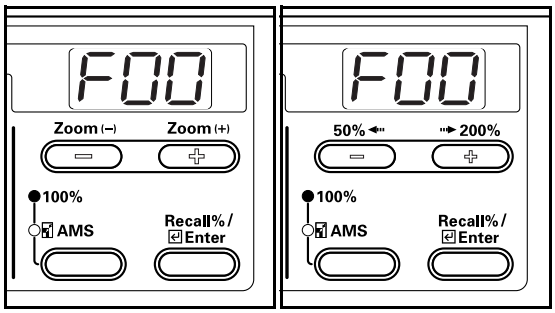

2 Press either the Zoom (+) or Zoom **(–)** key to display "F03".

Inch specifications **Metric specifications**

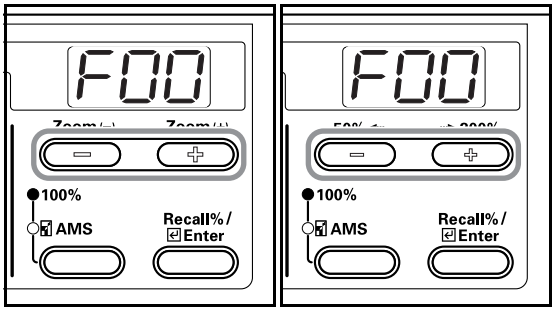

3 Press the [Enter] key.

Inch specifications **Metric specifications**

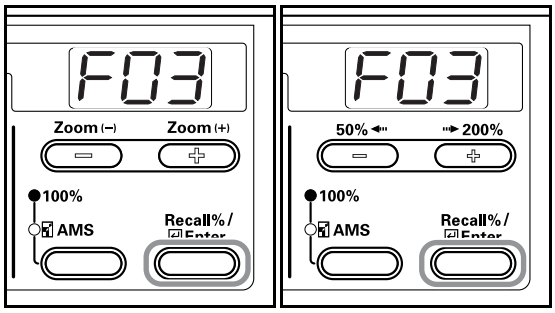

4 Press either the Zoom (+) key or the Zoom **(–)** key and select either "1- (Manual)", or "2- (Automatic)".

Inch specifications **Metric specifications**

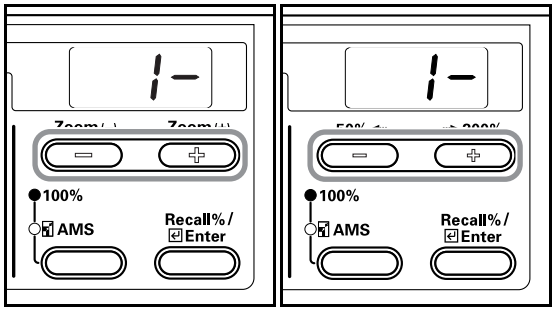

5 Press the [Enter] key.
The display will return to that of Step 2.

Inch specifications **Metric specifications**

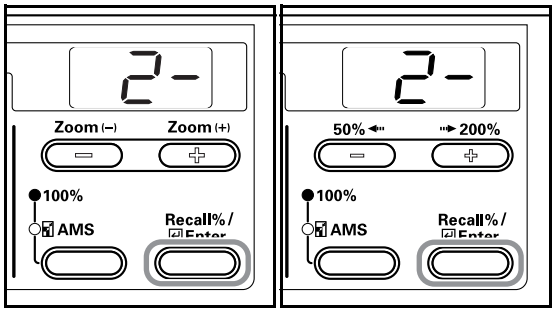

Eco-copy

Selects the initial value of Eco-copy when the power is turned on. The initial value of the Eco-copy can also be set to on (Enable).

1 Display the Default Settings Mode. (Refer to P.6-11 **"Default Settings Mode Operations Procedures"**.)

Inch specifications **Metric specifications**

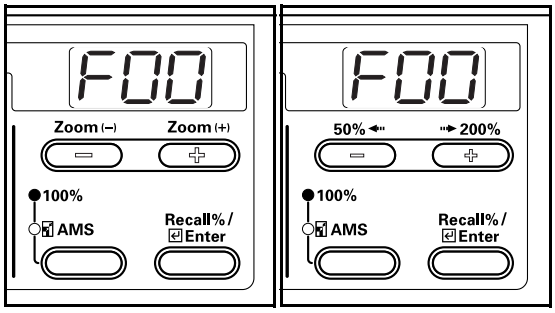

2 Press either the Zoom (+) or Zoom **(–)** key to display "F00".

Inch specifications **Metric specifications**

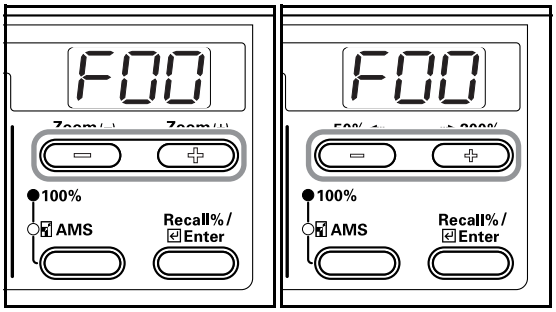

3 Press the [Enter] key.

Inch specifications **Metric specifications**

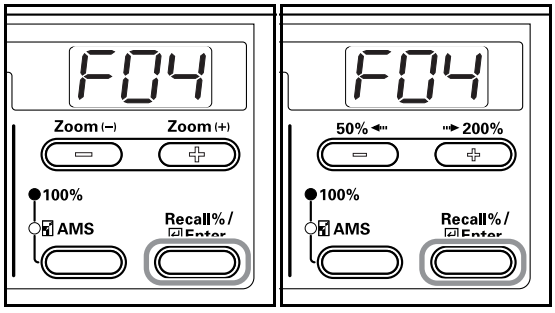

4 When Eco-copy is to be used as the initial value press the Zoom **(–)** key and select "on" (Enable).

Inch specifications **Metric specifications**

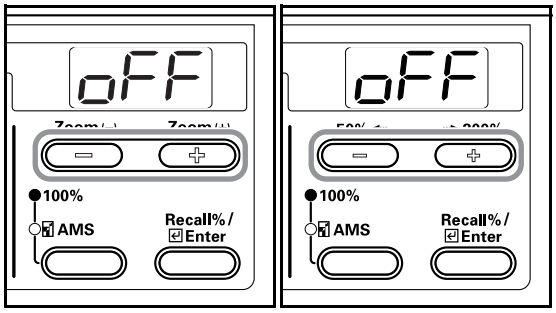

5 Press the [Enter] key.
The display will return to that of Step 2.

Inch specifications **Metric specifications**

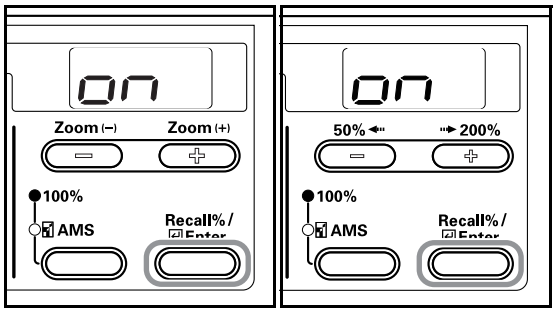

Exposure Steps

Changes the number of steps for the copy's exposure.

1 Display the Default Settings Mode. (Refer to P.6-11 **"Default Settings Mode Operations Procedures"**.)

Inch specifications **Metric specifications**

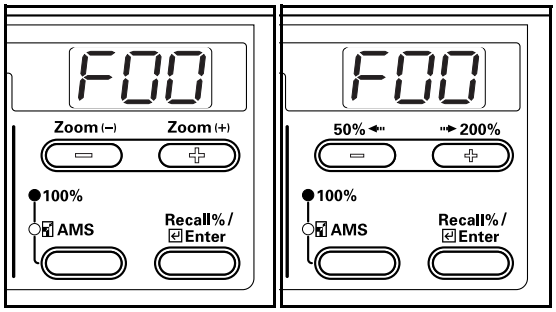

2 Press either the Zoom (+) or Zoom **(–)** key to display "F05".

Inch specifications **Metric specifications**

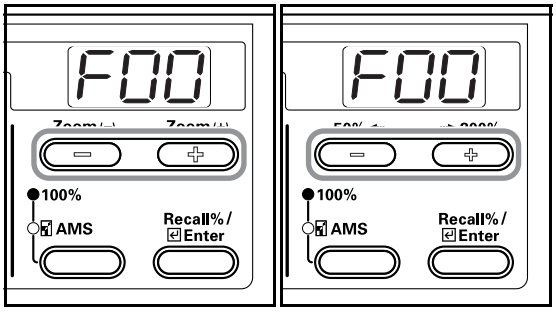

3 Press the [Enter] key.

Inch specifications **Metric specifications**

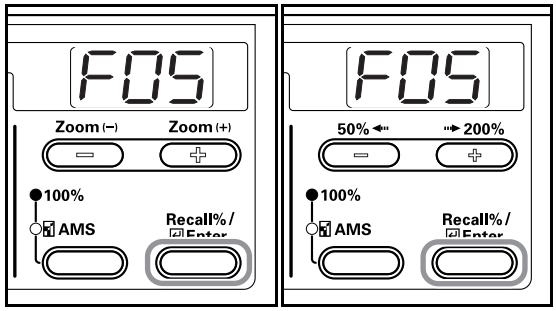

4 Press either the Zoom (+) key or the Zoom **(–)** key and select either "1- (1 Step)", or "2- (0.5 Step)".

Inch specifications **Metric specifications**

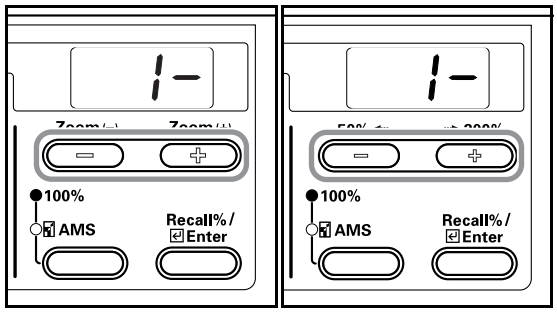

5 Press the [Enter] key.
The display will return to that of Step 2.

Inch specifications **Metric specifications**

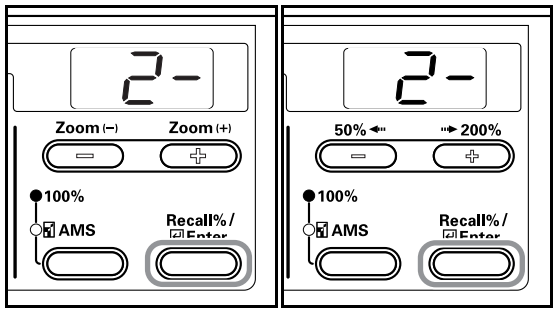

Auto Exposure Adjustment

Adjusts the overall exposure of the copy when Auto Exposure Mode is used.

1 Display the Default Settings Mode. (Refer to P.6-11 **"Default Settings Mode Operations Procedures"**.)

Inch specifications **Metric specifications**

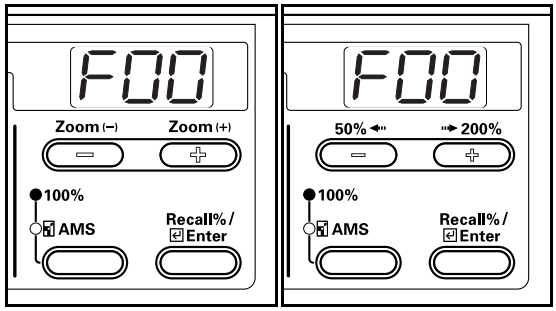

2 Press either the Zoom (+) or Zoom **(–)** key to display "F06".

Inch specifications **Metric specifications**

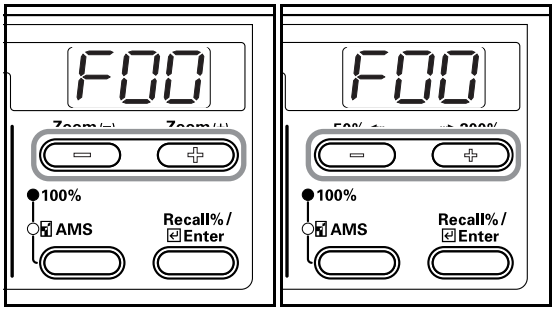

3 Press the [Enter] key.

Inch specifications **Metric specifications**

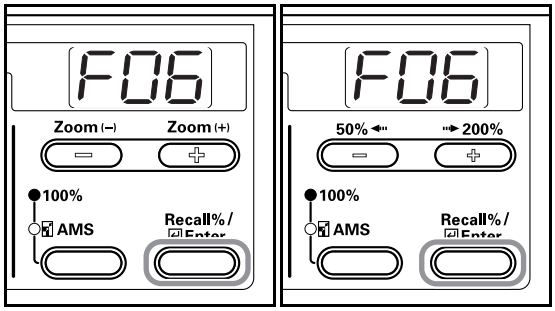

4 Press either the Zoom (+) key or the Zoom **(–)** key and select an exposure from 1 to 7.

Inch specifications **Metric specifications**

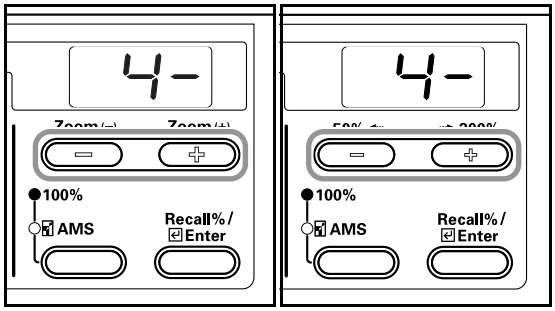

5 Press the [Enter] key.
The display will return to that of Step 2.

Inch specifications **Metric specifications**

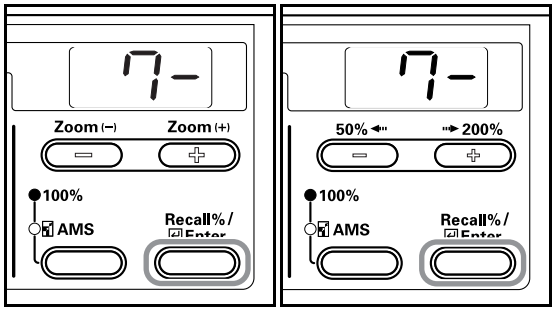

Text & Photo Mode Exposure Adjustment

Adjusts the median exposure value of the copy for the Text + Photo original.

1 Display the Default Settings Mode. (Refer to P.6-11 **"Default Settings Mode Operations Procedures"**.)

Inch specifications **Metric specifications**

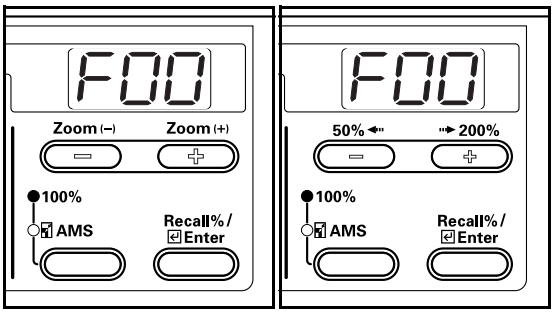

2 Press either the Zoom (+) or Zoom **(–)** key to display "F07".

Inch specifications **Metric specifications**

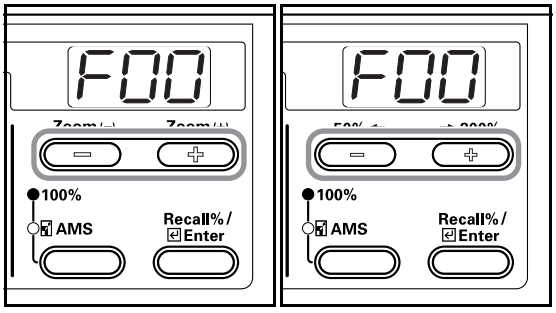

3 Press the [Enter] key.

Inch specifications **Metric specifications**

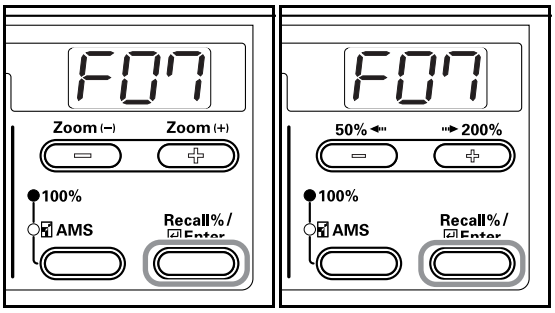

4 Press either the Zoom (+) key or the Zoom **(–)** key and select an exposure from 1 to 7.

Inch specifications **Metric specifications**

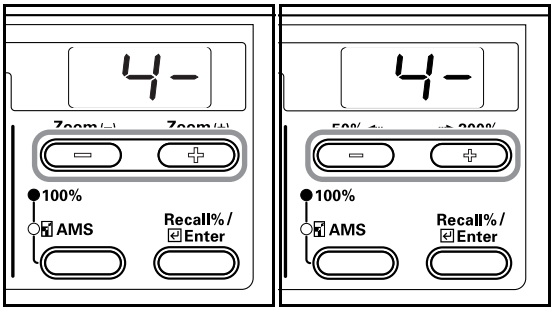

5 Press the [Enter] key.
The display will return to that of Step 2.

Inch specifications **Metric specifications**

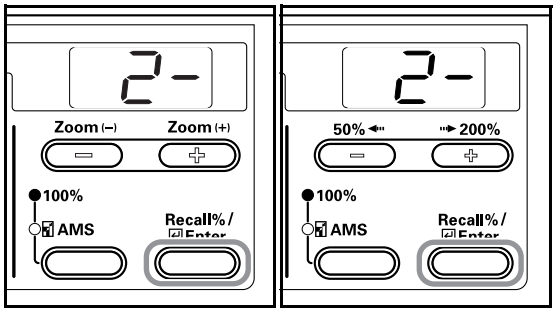

Photo Exposure Adjustment

Adjusts the median exposure value of the copy for the Photo original.

1 Display the Default Settings Mode. (Refer to P.6-11 **"Default Settings Mode Operations Procedures"**.)

Inch specifications **Metric specifications**

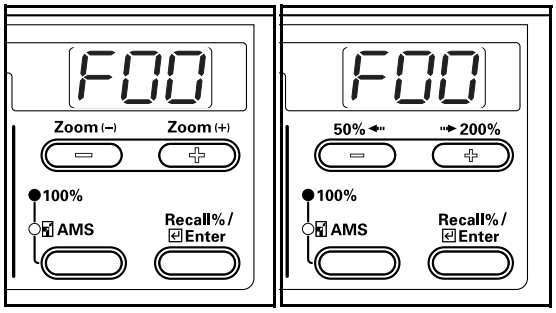

2 Press either the Zoom (+) or Zoom **(–)** key to display "F08".

Inch specifications **Metric specifications**

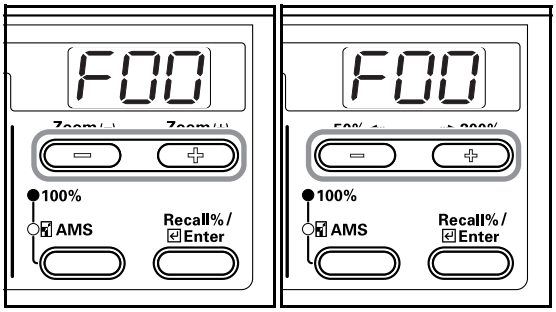

3 Press the [Enter] key.

Inch specifications **Metric specifications**

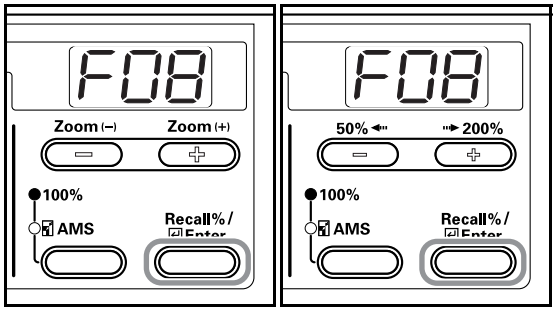

4 Press either the Zoom (+) key or the Zoom **(–)** key and select an exposure from 1 to 7.

Inch specifications **Metric specifications**

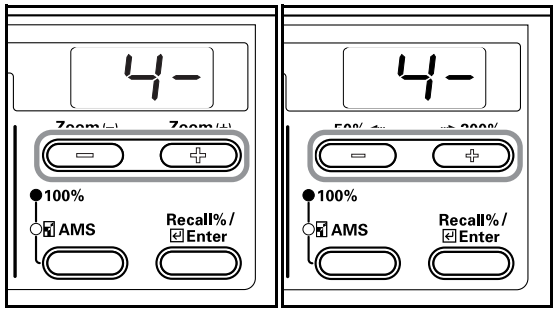

5 Press the [Enter] key.
The display will return to that of Step 2.

Inch specifications **Metric specifications**

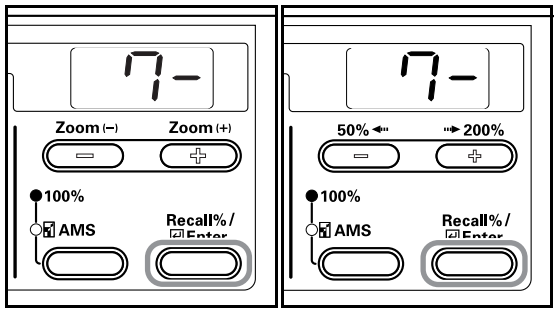

Text Adjustment Exposure

Adjusts the median exposure value of the copy for the Text original.

1 Display the Default Settings Mode. (Refer to P.6-11 **"Default Settings Mode Operations Procedures"**.)

Inch specifications **Metric specifications**

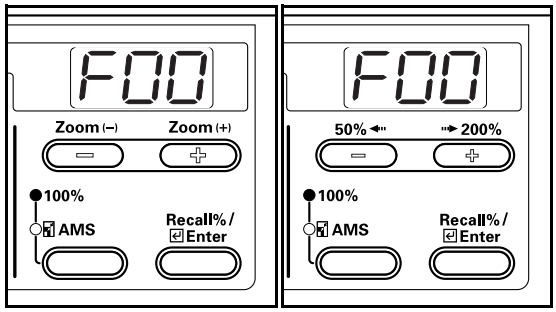

2 Press either the Zoom (+) or Zoom **(–)** key to display "F09".

Inch specifications **Metric specifications**

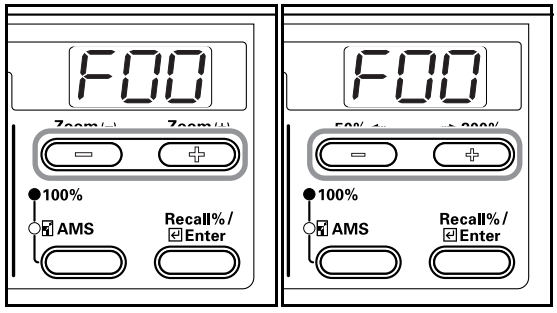

3 Press the [Enter] key.

Inch specifications **Metric specifications**

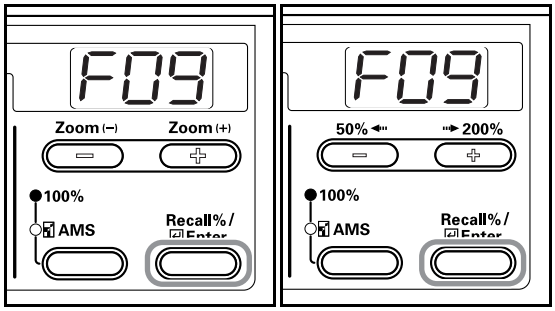

4 Press either the Zoom (+) key or the Zoom **(–)** key and select an exposure from 1 to 7.

Inch specifications **Metric specifications**

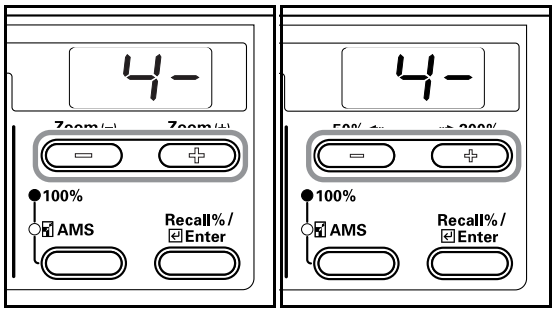

5 Press the [Enter] key.
The display will return to that of Step 2.

Inch specifications **Metric specifications**

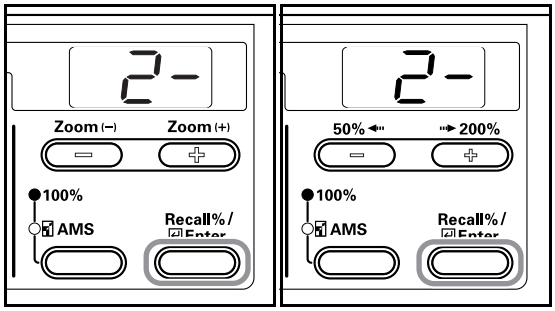

Processing to Reduce Black Line

It is possible to make black line less noticeable when it appears when using the optional Document Processor. Using processing to reduce black line decreases the reproduction quality of small characters, so it is recommended that the copier normally be used at the factory default setting.

Note
When Photo Mode has been selected in Image Quality Mode, processing to reduce black line is not possible.

1 Display the Default Settings Mode. (Refer to P.6-11 **"Default Settings Mode Operations Procedures"**.)

Inch specifications **Metric specifications**

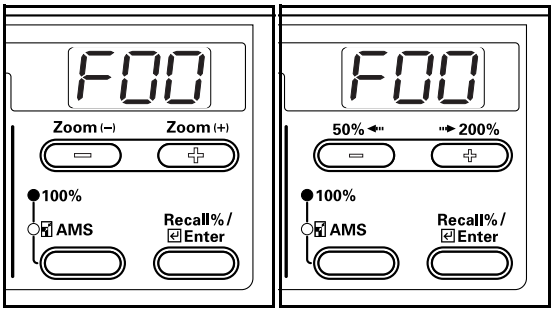

2 Press either the Zoom (+) or Zoom **(–)** key to display "F10".

Inch specifications **Metric specifications**

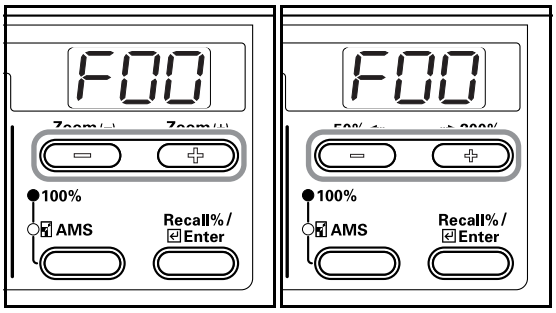

3 Press the [Enter] key.

Inch specifications **Metric specifications**

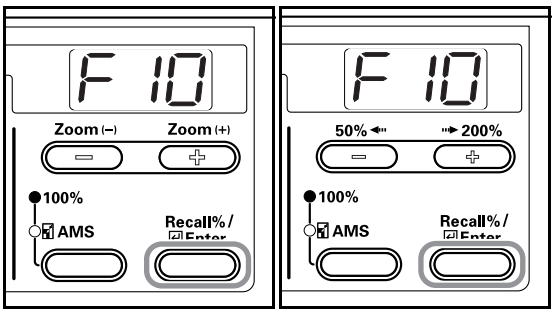

4 Press either the Zoom (+) key or the Zoom **(–)** key and select "1- (OFF)", "2- (Weak)" or "3- (Strong)".

Inch specifications **Metric specifications**

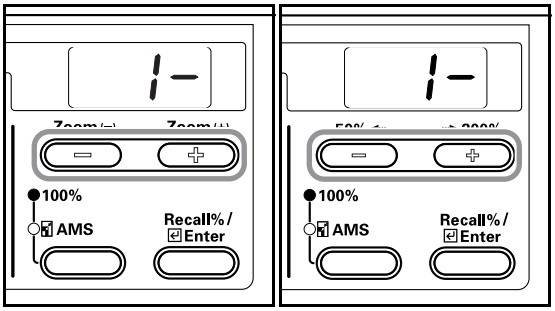

5 Press the [Enter] key.
The display will return to that of Step 2.

Inch specifications **Metric specifications**

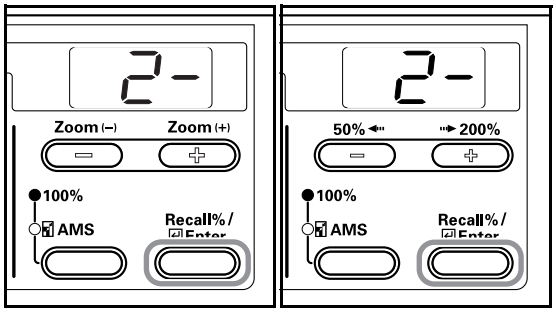

Photo Processing

Select the processing method for photo originals.

1 Display the Default Settings Mode. (Refer to P.6-11 **"Default Settings Mode Operations Procedures"**.)

Inch specifications **Metric specifications**

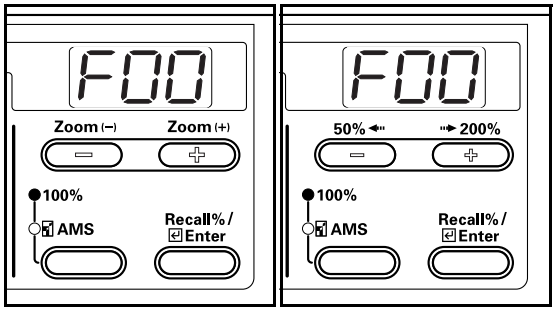

2 Press either the Zoom (+) or Zoom **(–)** key to display "F11".

Inch specifications **Metric specifications**

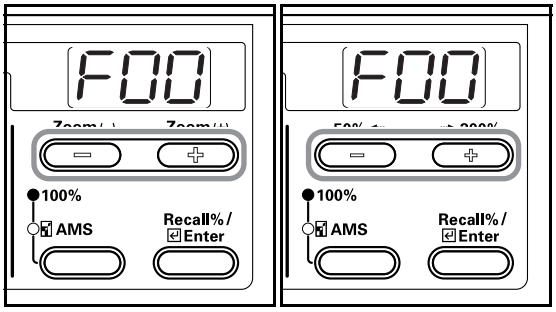

3 Press the [Enter] key.

Inch specifications **Metric specifications**

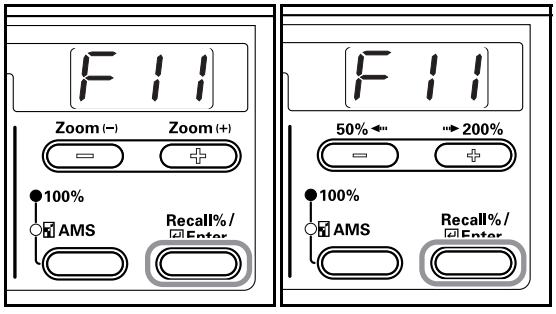

4 Press either the Zoom (+) key or the Zoom **(–)** key and select either "1- (Error Diffusion)", or "2- (Dithering)".

Inch specifications **Metric specifications**

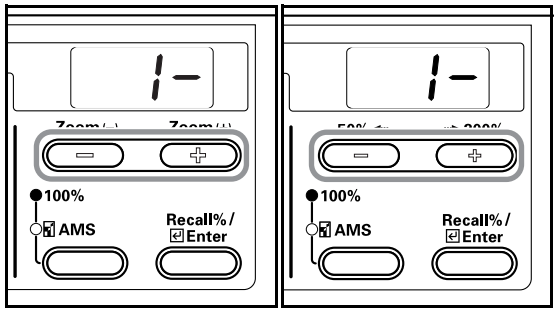

5 Press the [Enter] key.
The display will return to that of Step 2.

Inch specifications **Metric specifications**

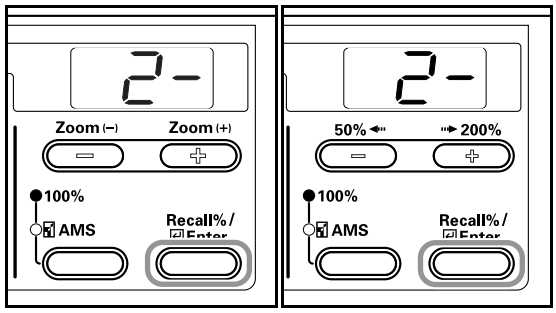

Back ground Adjustment

The back ground can be lightened when it is found to be too dark after copying.

1 Display the Default Settings Mode. (Refer to P.6-11 **"Default Settings Mode Operations Procedures"**.)

Inch specifications **Metric specifications**

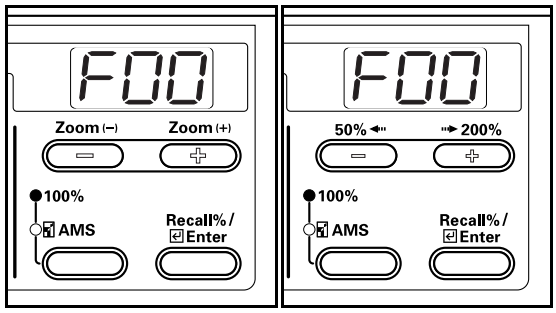

2 Press either the Zoom (+) or Zoom **(–)** key to display "F12".

Inch specifications **Metric specifications**

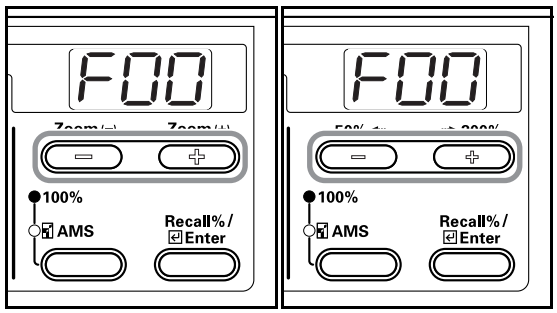

3 Press the [Enter] key.

Inch specifications **Metric specifications**

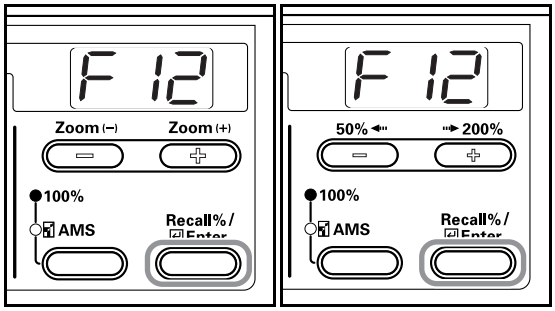

4 Press either the Zoom (+) key or the Zoom **(–)** key and select a back ground color exposure from 1 to 5.

Inch specifications **Metric specifications**

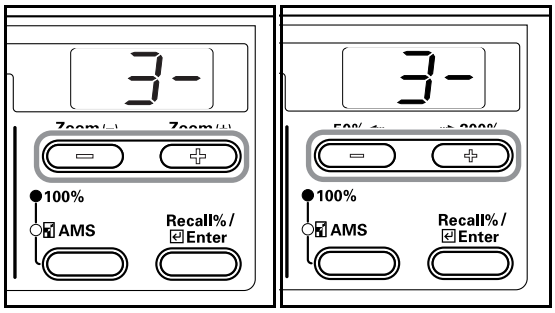

5 Press the [Enter] key.
The display will return to that of Step 2.

Inch specifications **Metric specifications**

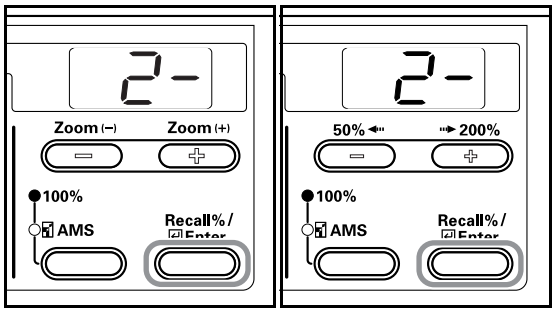

Drawer Selection

Selects whether the drawer with the same size of paper as the original size will be automatically selected or whether a selected drawer level (fixed) is to be used.

1 Display the Default Settings Mode. (Refer to P.6-11 **"Default Settings Mode Operations Procedures"**.)

Inch specifications **Metric specifications**

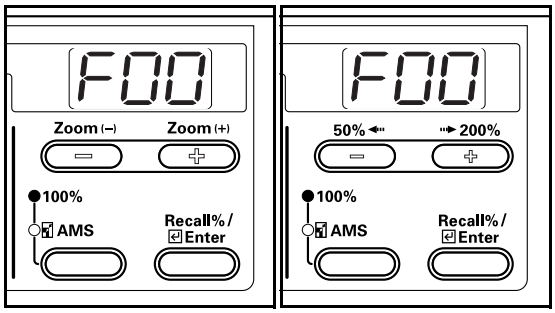

2 Press either the Zoom (+) or Zoom **(–)** key to display "F13".

Inch specifications **Metric specifications**

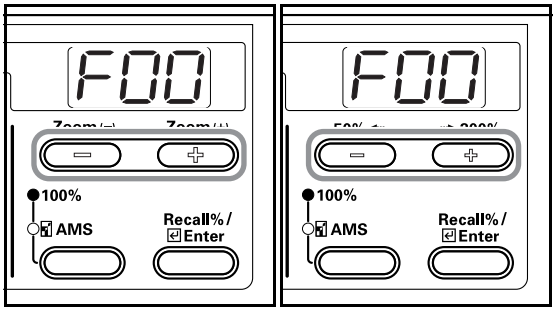

3 Press the [Enter] key.

Inch specifications **Metric specifications**

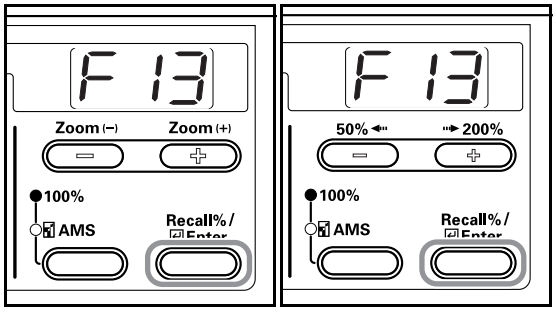

4 Press either the Zoom (+) key or the Zoom **(–)** key and select either "1- (Automatic Paper Selection)", or "2- (Selected Drawer)".

Inch specifications **Metric specifications**

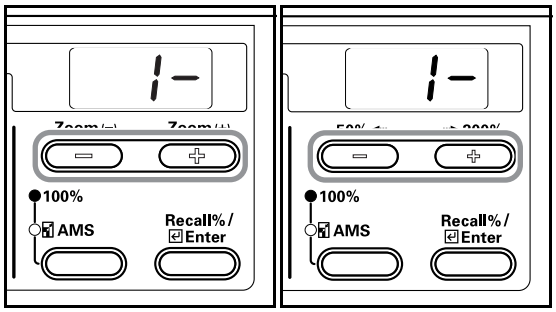

5 Press the [Enter] key.
The display will return to that of Step 2.

Inch specifications **Metric specifications**

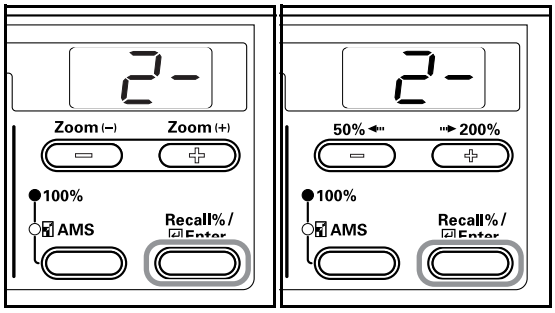

Selected Drawer

When the optional Paper Feeder is installed, priority will be assigned to the drawer that is selected automatically. Manual paper feeding cannot be set using the Selected Drawer function.

1 Display the Default Settings Mode. (Refer to P.6-11 **"Default Settings Mode Operations Procedures"**.)

Inch specifications **Metric specifications**

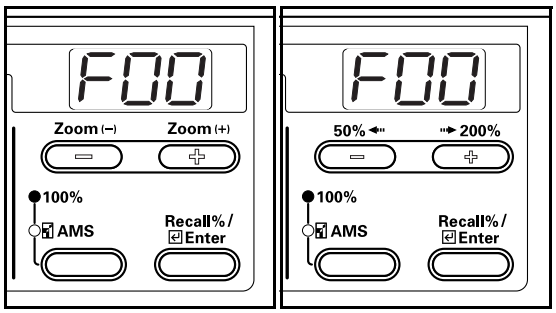

2 Press either the Zoom (+) or Zoom **(–)** key to display "F14".

Inch specifications **Metric specifications**

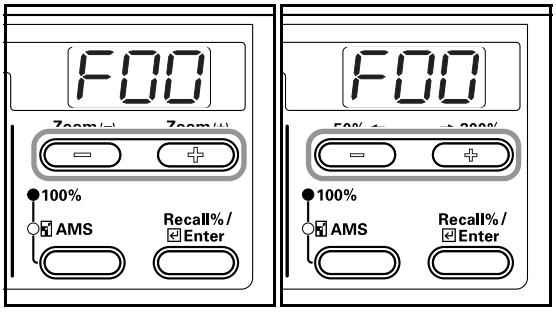

3 Press the [Enter] key.

Inch specifications **Metric specifications**

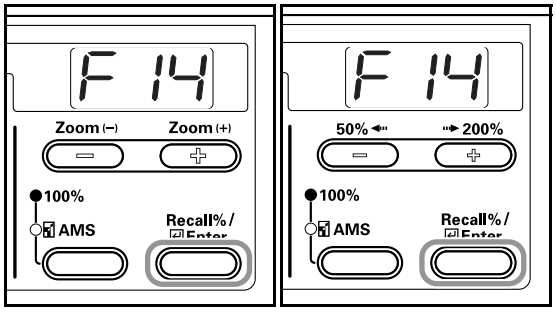

4 Press either the Zoom (+) key or the Zoom **(–)** key and select the drawer to be given priority for use.

Inch specifications **Metric specifications**

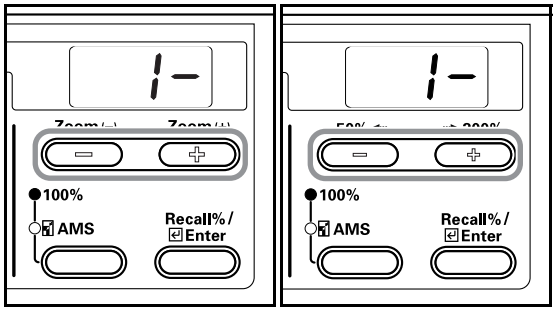

Note
The range of selection will vary in accordance with the number of drawers installed.

5 Press the [Enter] key.
The display will return to that of Step 2.

Inch specifications **Metric specifications**

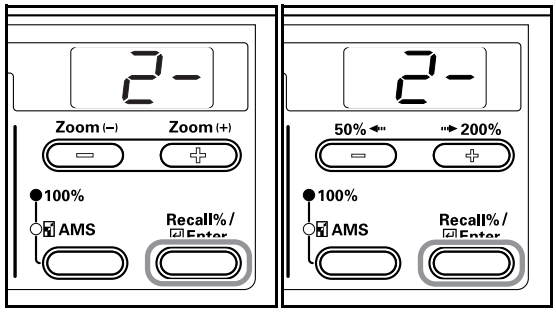

Auto Drawer Switching

When the optional Paper Feeder has been installed, select whether or not to use the Auto Drawer Switching function.

1 Display the Default Settings Mode. (Refer to P.6-11 **"Default Settings Mode Operations Procedures"**.)

Inch specifications **Metric specifications**

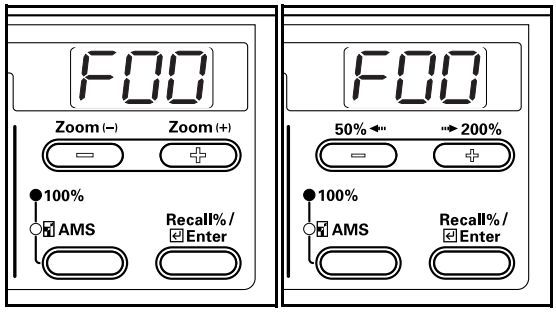

2 Press either the Zoom (+) or Zoom **(–)** key to display "F15".

Inch specifications **Metric specifications**

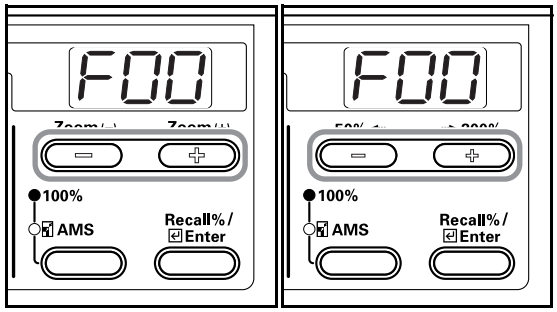

3 Press the [Enter] key.

Inch specifications **Metric specifications**

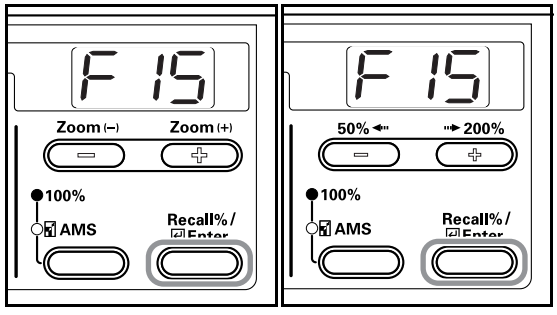

4 Press either the Zoom (+) or Zoom (–) key and select "on" when the Auto Drawer Switching function is to be used and "oFF" when it will not be used.

Inch specifications **Metric specifications**

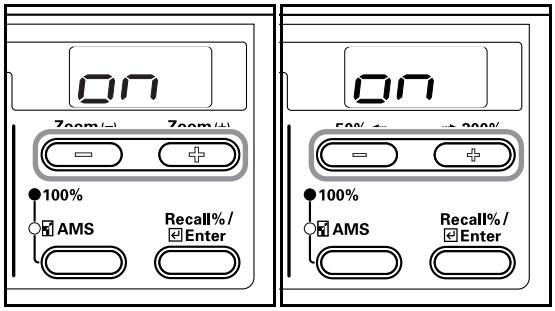

5 Press the [Enter] key.
The display will return to that of Step 2.

Inch specifications **Metric specifications**

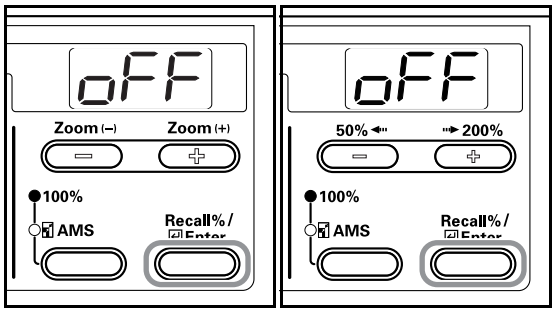

Auto Sizing

Sets whether or not to use automatic sizing (zoom/reduction percentage) when a paper drawer has been selected.

1 Display the Default Settings Mode. (Refer to P.6-11 **"Default Settings Mode Operations Procedures"**.)

Inch specifications **Metric specifications**

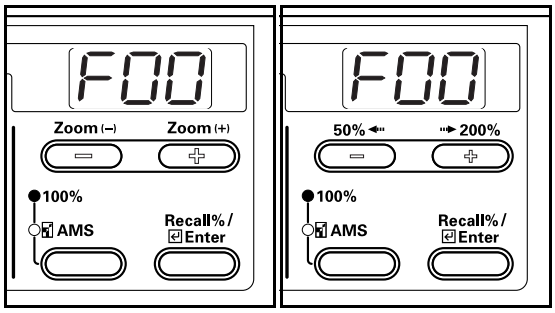

2 Press either the Zoom (+) or Zoom (–) key to display "F16".

Inch specifications **Metric specifications**

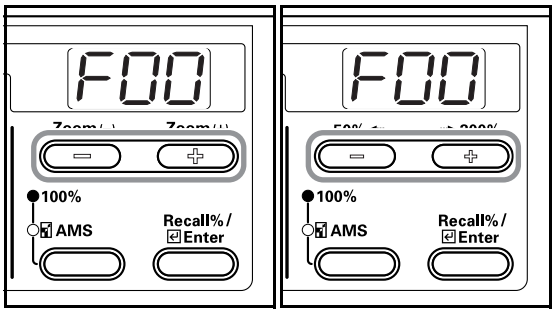

3 Press the [Enter] key.

Inch specifications **Metric specifications**

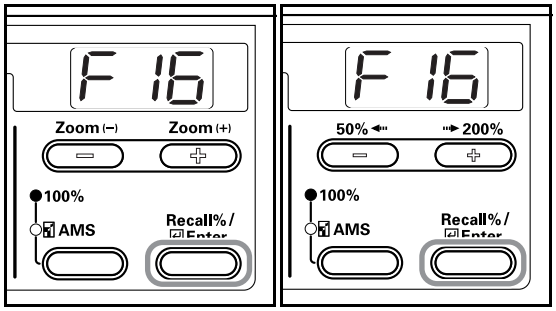

4 Press either the Zoom (+) or Zoom (–) key and select "on" when the Automatic Sizing function is to be used and "oFF" when copies are to be taken at a 1:1 ratio.

Inch specifications **Metric specifications**

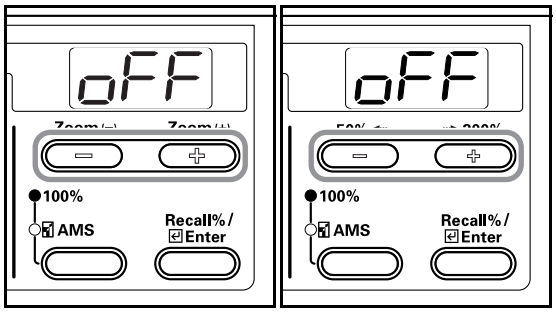

5 Press the [Enter] key.
The display will return to that of Step 2.

Inch specifications **Metric specifications**

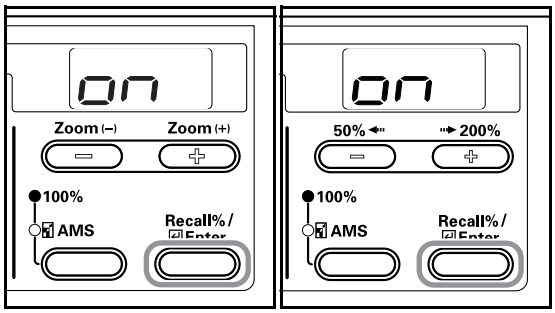

Drawer Paper Size (Drawers 1 to 4)

Set the Paper Sizes for Drawers 1 to 4.
The setting of Drawer 1 is shown here as an example. Select F18, F19 and F20 in the Default Settings Mode before selecting Drawers 2, 3 and 4 (option), respectively.

1 Display the Default Settings Mode. (Refer to P.6-11 **"Default Settings Mode Operations Procedures"**.)

Inch specifications **Metric specifications**

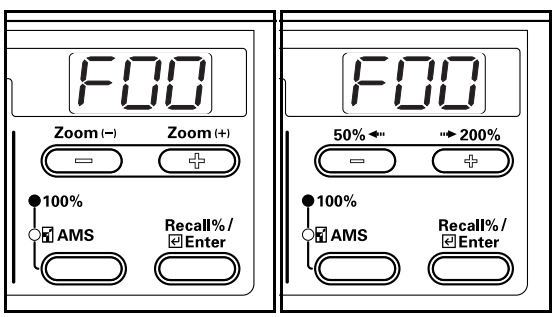

2 Press either the Zoom (+) or Zoom **(–)** key to display "F17".

Inch specifications **Metric specifications**

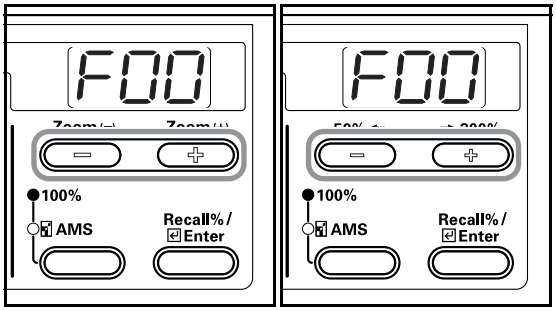

3 Press the [Enter] key.

Inch specifications **Metric specifications**

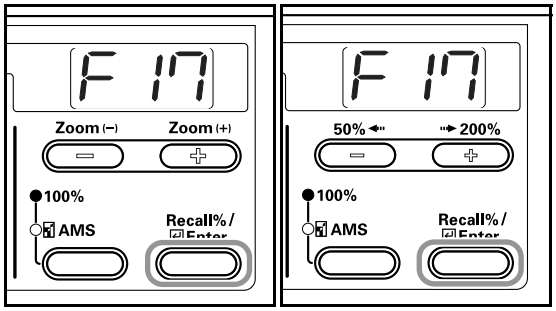

4 Press either the Zoom (+) or Zoom **(–)** key and select "AtI" when automatic detection in inch units is to be performed and "AtC" when the detection is to be done in centimeter units. When setting the Oficio II size, select "o2r".

Inch specifications **Metric specifications**

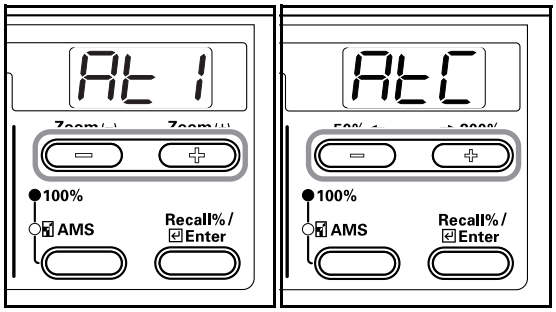

Note
Drawers 2, 3 and 4 will be displayed only when the optional Paper Feeder is installed.

5 Press the [Enter] key.
The display will return to that of Step 2.

Inch specifications **Metric specifications**

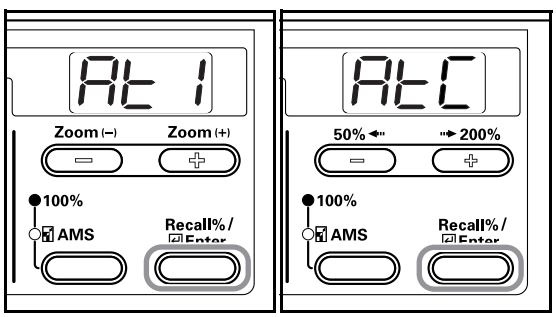

Multi-bypass Tray Paper Size

Sets the Manual Paper Feed Size.

1 Display the Default Settings Mode. (Refer to P.6-11 **"Default Settings Mode Operations Procedures"**.)

Inch specifications **Metric specifications**

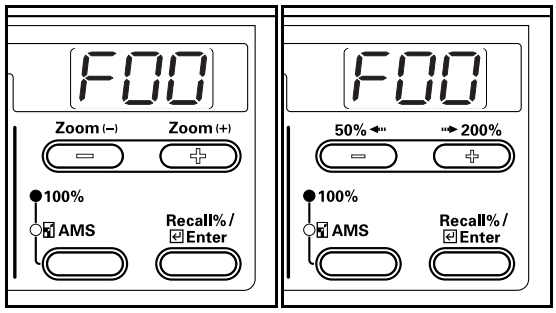

2 Press either the Zoom (+) or Zoom **(–)** key to display "F21".

Inch specifications **Metric specifications**

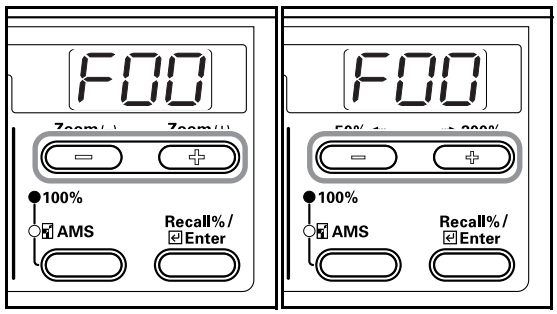

3 Press the [Enter] key.

Inch specifications **Metric specifications**

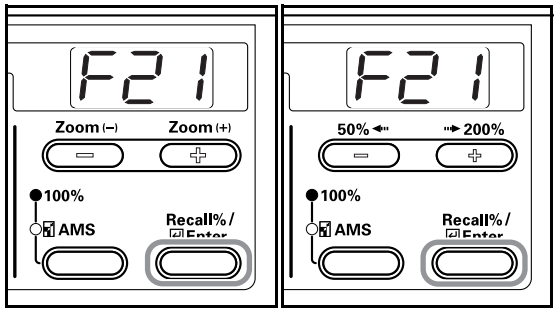

4 Press either the Zoom (+) key or the Zoom **(–)** key and select the paper type.

Inch specifications **Metric specifications**

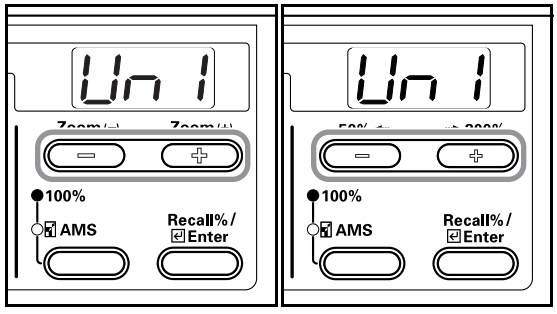

5 Press the [Enter] key.
The display will return to that of Step 2.

Inch specifications **Metric specifications**

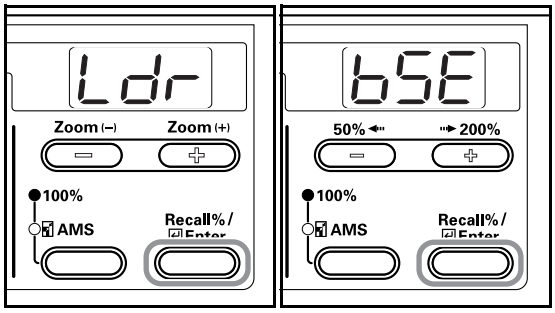

Custom Size (1 to 2)

Set the Custom Size.
The setting of Custom Size 1 is shown here as an example. To set Custom Size 2 select F23 in the Default Settings Mode and then perform the same settings.

1 Display the Default Settings Mode. (Refer to P.6-11 **"Default Settings Mode Operations Procedures"**.)

Inch specifications **Metric specifications**

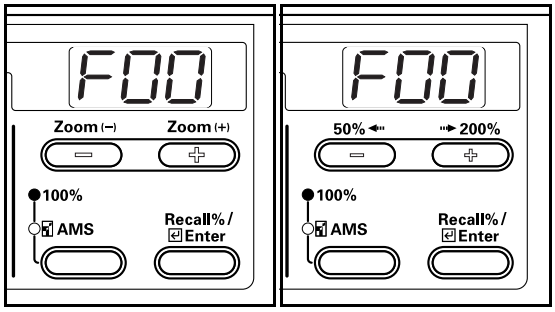

2 Press either the Zoom (+) or Zoom **(–)** key to display "F22".

Inch specifications **Metric specifications**

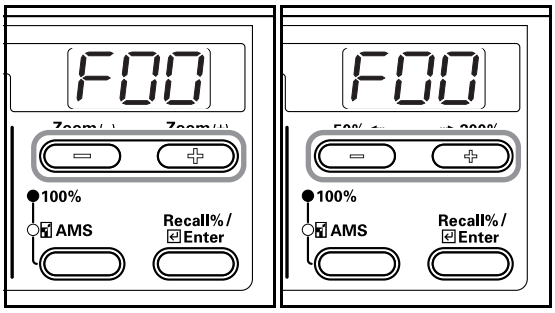

3 Press the [Enter] key.

Inch specifications **Metric specifications**

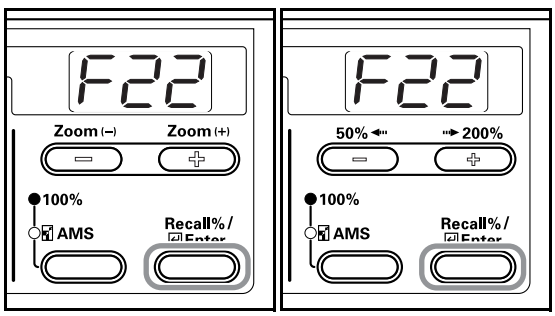

4 Press either the Zoom (+) key or the Zoom **(–)** key and select the size.
InP (Irregular Size) When selecting Irregular Sizes, carry out the following procedure. In the case of the selection of other sizes, proceed to Step 9.

Inch specifications **Metric specifications**

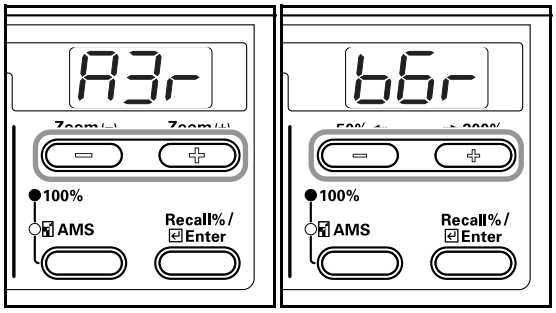

5 Press the [Enter] key.

Inch specifications **Metric specifications**

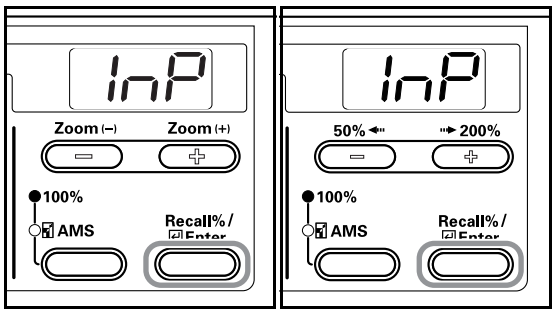

6 Press either the Zoom (+) or Zoom **(–)** key and input the Length Size (Y Direction) in inch/mm units.

Inch specifications **Metric specifications**

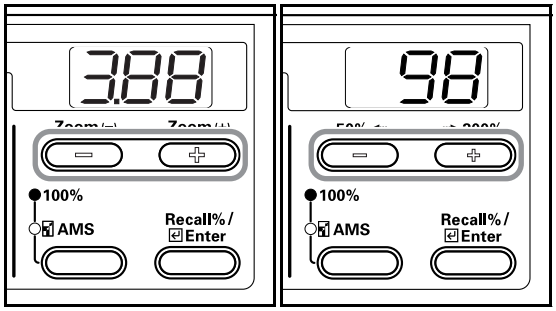

7 Press the [Enter] key.

Inch specifications **Metric specifications**

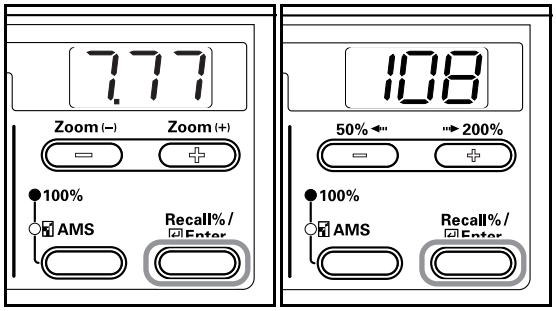

8 Press either the Zoom (+) or Zoom **(–)** key and input the Width Size (X Direction) in inch/mm units.

Inch specifications **Metric specifications**

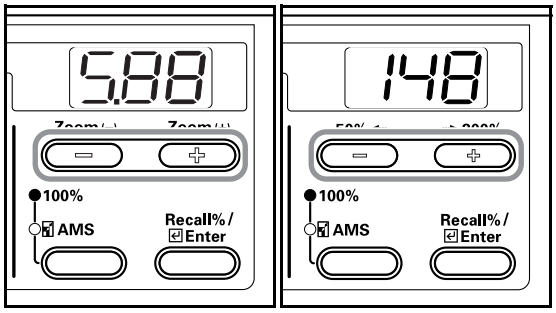

9 Press the [Enter] key.
The display will return to that of Step 2.

Inch specifications **Metric specifications**

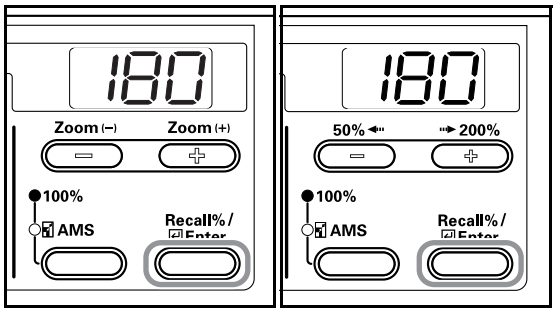

Copy Limit

Limits the number of copies or sets of copies that can be made at one time.

1 Display the Default Settings Mode. (Refer to P.6-11 **"Default Settings Mode Operations Procedures"**.)

Inch specifications **Metric specifications**

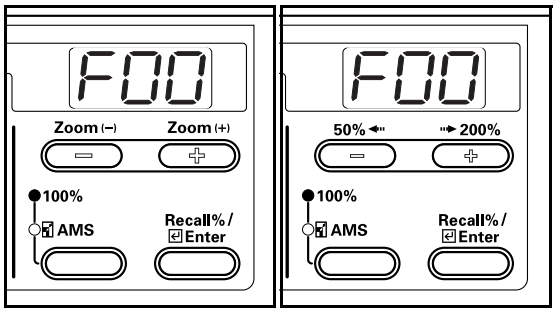

2 Press either the Zoom (+) or Zoom **(–)** key to display "F24".

Inch specifications **Metric specifications**

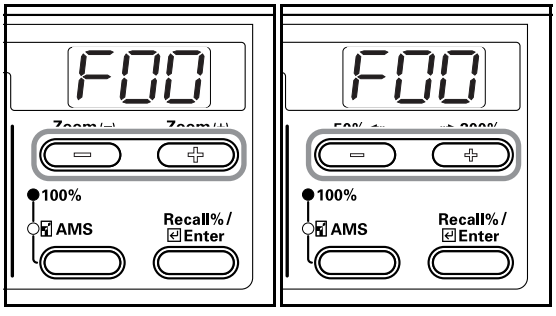

3 Press the [Enter] key.

Inch specifications **Metric specifications**

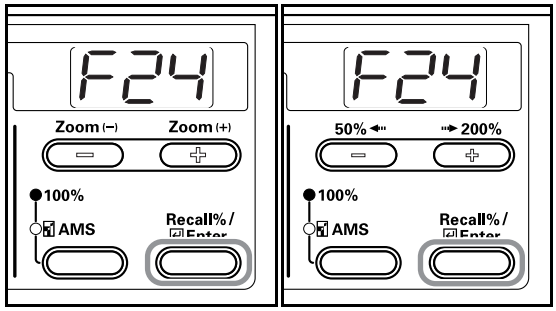

4 Press either the Zoom (+) key or the Zoom **(–)** key and set the copy limit value (1 to 250). This can also be input using the Keypad.

Inch specifications **Metric specifications**

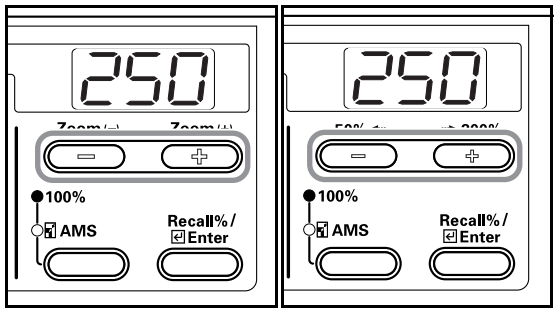

5 Press the [Enter] key.
The display will return to that of Step 2.

Inch specifications **Metric specifications**

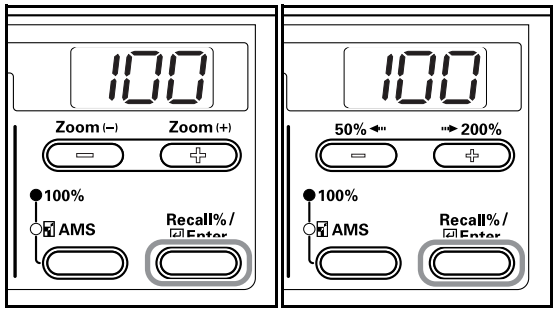

2-Sided Copy Reverse Side Rotation

Set whether or not to rotate the reverse-side for 2-Sided Copy.

1 Display the Default Settings Mode. (Refer to P.6-11 **"Default Settings Mode Operations Procedures"**.)

Inch specifications **Metric specifications**

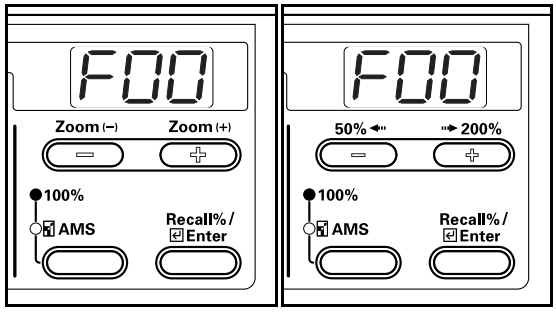

2 Press either the Zoom (+) or Zoom **(–)** key to display "F25".

Inch specifications **Metric specifications**

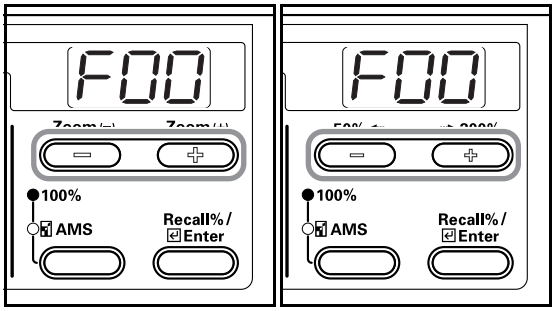

3 Press the [Enter] key.

Inch specifications **Metric specifications**

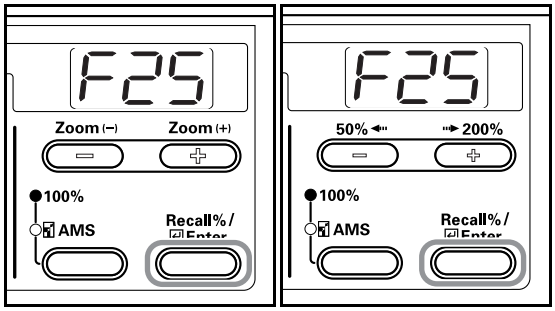

4 Press either the Zoom (+) or Zoom **(–)** key and select "on" when the reverse side is to be rotated and "oFF" when no rotation is to be performed.

Inch specifications **Metric specifications**

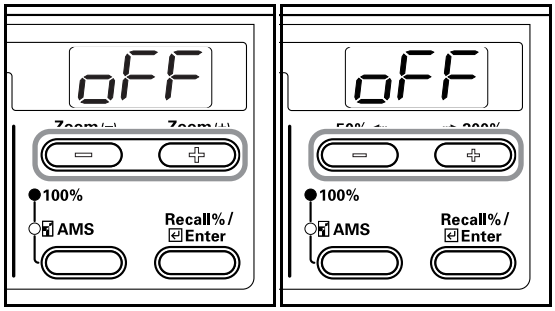

5 Press the [Enter] key.
The display will return to that of Step 2.

Inch specifications **Metric specifications**

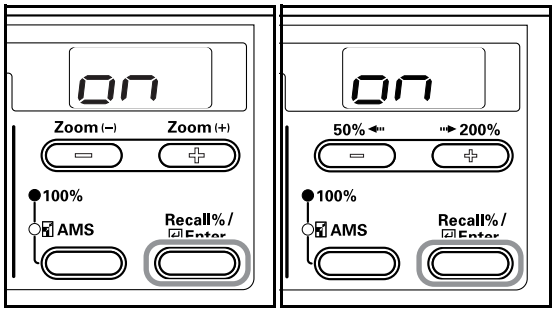

Margin Shift

Set the Margin Width.

1 Display the Default Settings Mode. (Refer to P.6-11 **"Default Settings Mode Operations Procedures"**.)

Inch specifications **Metric specifications**

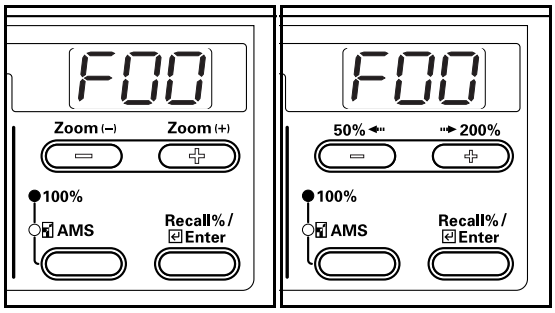

2 Press either the Zoom (+) or Zoom **(–)** key to display "F26".

Inch specifications **Metric specifications**

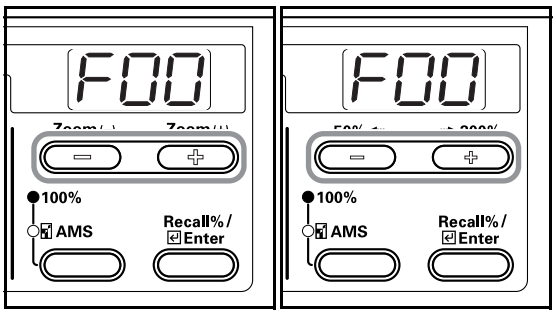

3 Press the [Enter] key.

Inch specifications **Metric specifications**

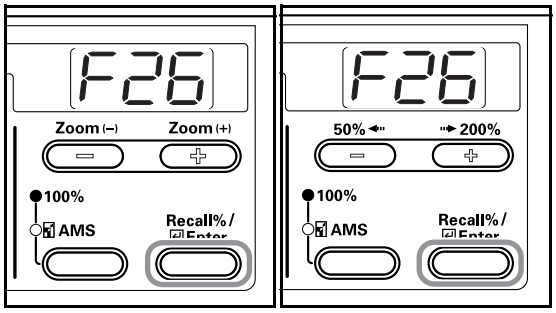

4 Press either the Zoom (+) key or the Zoom **(–)** key and set the Margin Width within the range from 0.13/0.25/0.38/0.50/0.63/0.75(")/1 - 18 (mm).

Inch specifications **Metric specifications**

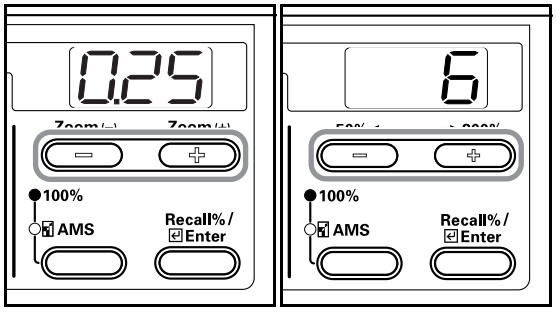

5 Press the [Enter] key.
The display will return to that of Step 2.

Inch specifications **Metric specifications**

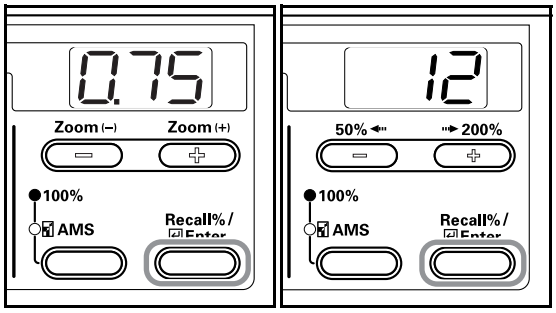

Border Width

Perform the following procedure to determine the default valve of the width of the Border Erase mode.

1 Display the Default Settings Mode. (Refer to P.6-11 **"Default Settings Mode Operations Procedures"**.)

Inch specifications **Metric specifications**

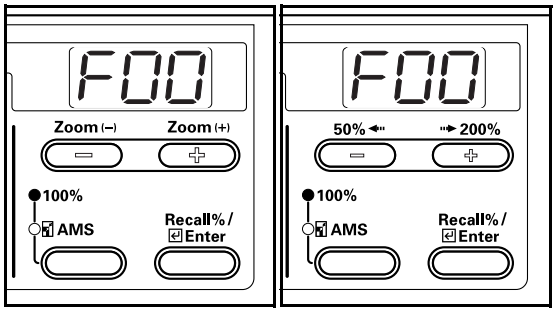

2 Press either the Zoom (+) or Zoom **(–)** key to display "F27".

Inch specifications **Metric specifications**

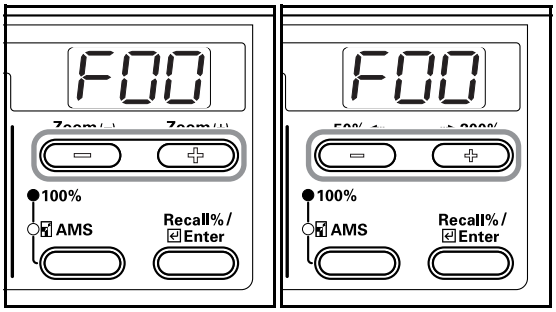

3 Press the [Enter] key.

Inch specifications **Metric specifications**

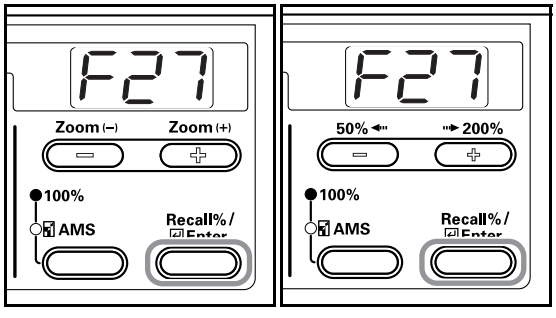

4 Press either the Zoom (+) key or the Zoom **(–)** key and select the initial value for the Border Width from among "0.13", "0.25", "0.38", "0.50", "0.63", "0.75"(")/1 - 18 (mm).

Inch specifications **Metric specifications**

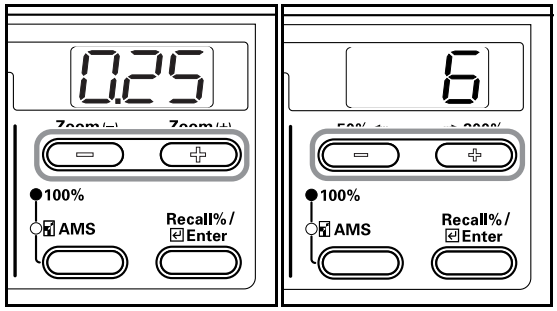

5 Press the [Enter] key.
The display will return to that of Step 2.

Inch specifications **Metric specifications**

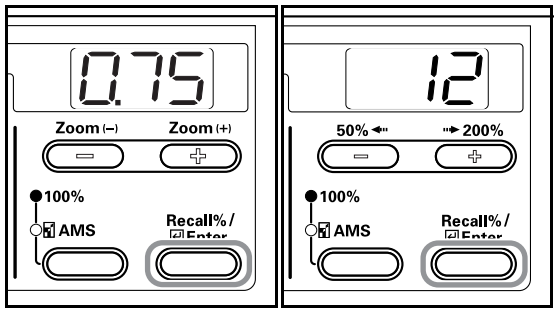

4 in 1 Layout Order

Set the initial value for the layout when making 4 in 1 layout mode.

1 Display the Default Settings Mode. (Refer to P.6-11 **"Default Settings Mode Operations Procedures"**.)

Inch specifications **Metric specifications**

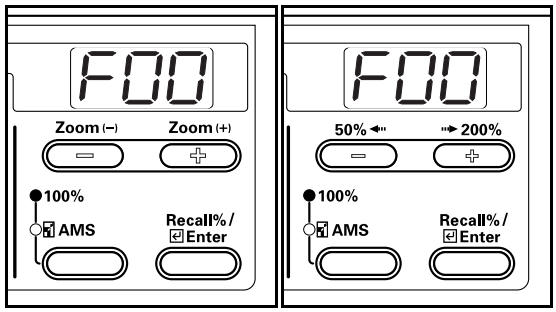

2 Press either the Zoom (+) or Zoom **(–)** key to display "F28".

Inch specifications **Metric specifications**

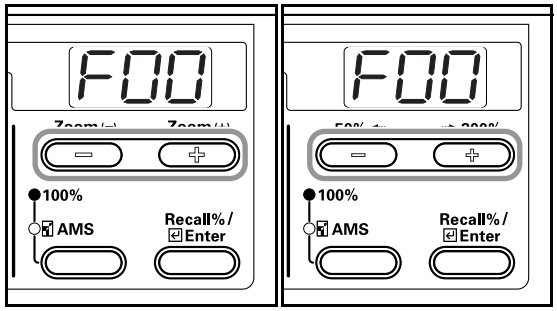

3 Press the [Enter] key.

Inch specifications **Metric specifications**

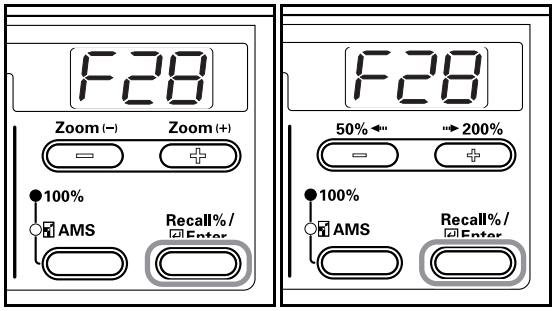

4 Press either the Zoom (+) key or the Zoom **(–)** key and select the initial layout value.

Inch specifications **Metric specifications**

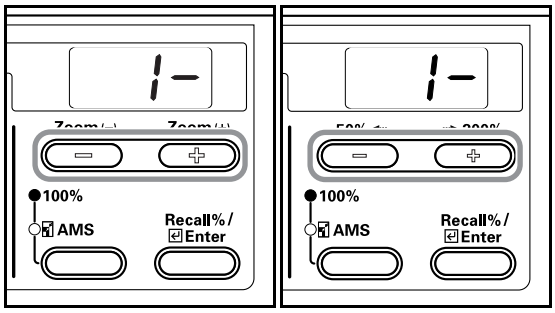

5 Press the [Enter] key.
The display will return to that of Step 2.

Inch specifications **Metric specifications**

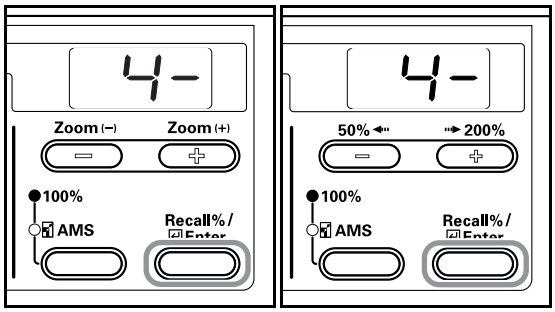

Merge Copy Borderline

Set the initial value for the borderline for Merge Copies.

1 Display the Default Settings Mode. (Refer to P.6-11 **"Default Settings Mode Operations Procedures"**.)

Inch specifications **Metric specifications**

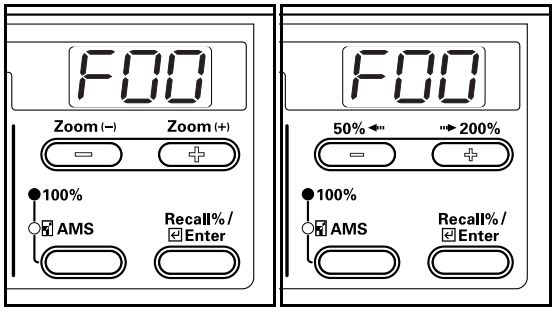

2 Press either the Zoom (+) or Zoom **(–)** key to display "F29".

Inch specifications **Metric specifications**

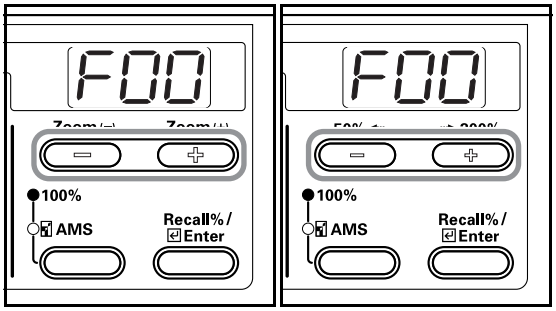

3 Press the [Enter] key.

Inch specifications **Metric specifications**

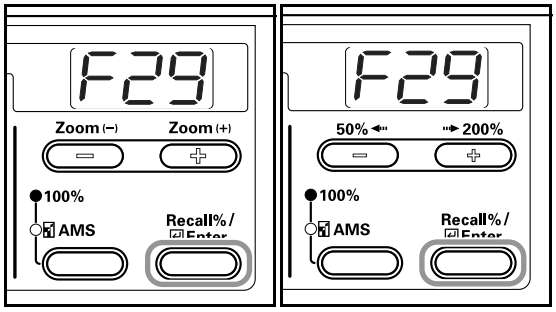

4 Press either the Zoom (+) key or the Zoom **(–)** key and select "1-" when no borderline is to be applied, "2-" for when a solid line is to be used or "3-" for when a dotted line is to be used.

Inch specifications **Metric specifications**

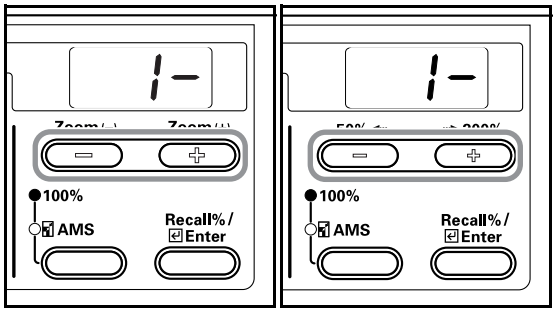

5 Press the [Enter] key.
The display will return to that of Step 2.

Inch specifications **Metric specifications**

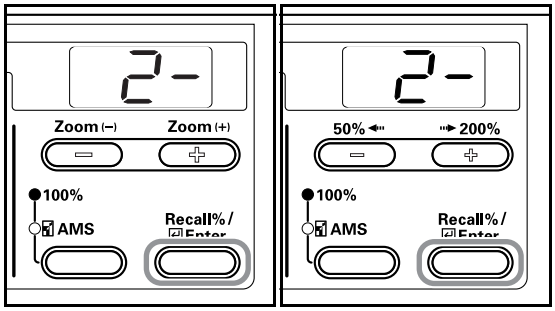

Rotate Sort Setting

Set whether or not to change the direction for each copy set and sort it when sorting copies.

1 Display the Default Settings Mode. (Refer to P.6-11 **"Default Settings Mode Operations Procedures"**.)

Inch specifications **Metric specifications**

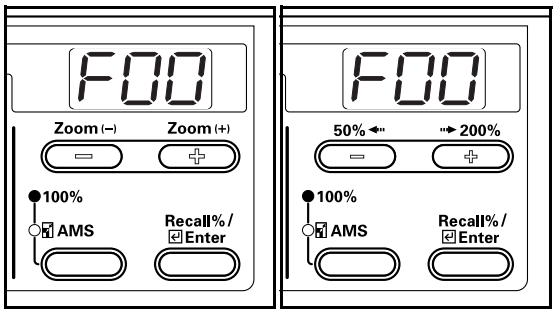

2 Press either the Zoom (+) or Zoom **(–)** key to display "F30".

Inch specifications **Metric specifications**

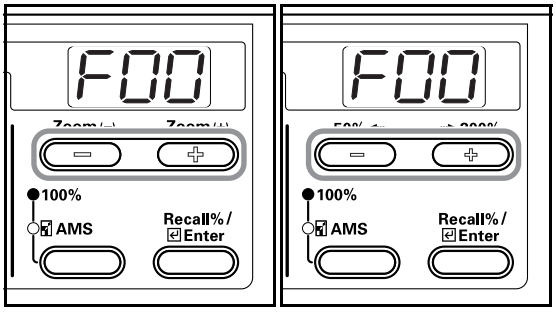

3 Press the [Enter] key.

Inch specifications **Metric specifications**

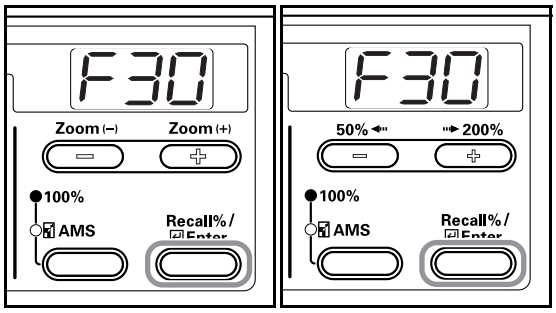

4 Press either the Zoom (+) key or the Zoom **(–)** key and select "on" to change the direction for each copy set and sort it or "oFF" to sort in the same direction.

Inch specifications **Metric specifications**

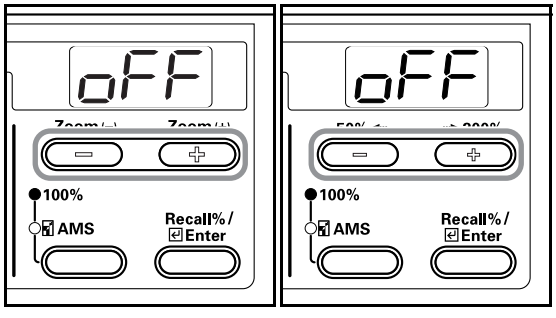

5 Press the [Enter] key.
The display will return to that of Step 2.

Inch specifications **Metric specifications**

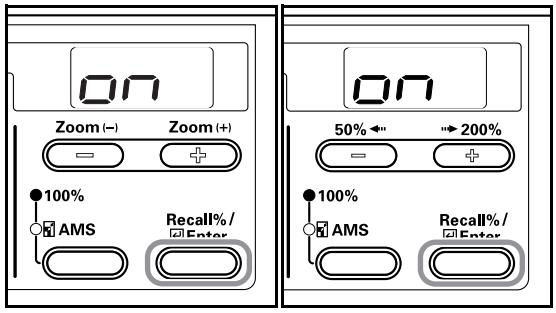

Silent Mode Transition Time

Shortens the amount of time the internal motor continues to run after the copy is produced. Use this setting in cases when the motor noise is bothersome.

1 Display the Default Settings Mode. (Refer to P.6-11 **"Default Settings Mode Operations Procedures"**.)

Inch specifications **Metric specifications**

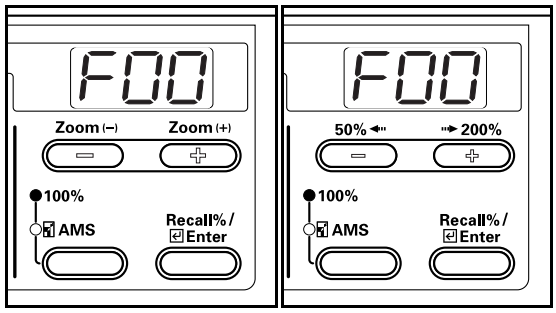

2 Press either the Zoom (+) or Zoom **(–)** key to display "F31".

Inch specifications **Metric specifications**

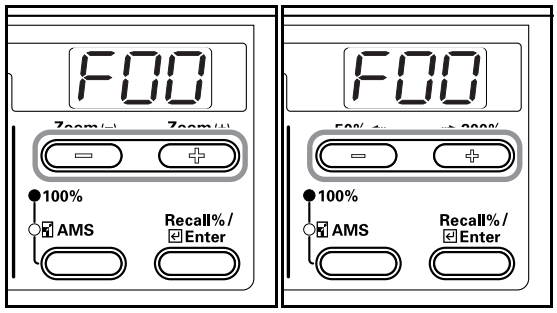

3 Press the [Enter] key.

Inch specifications **Metric specifications**

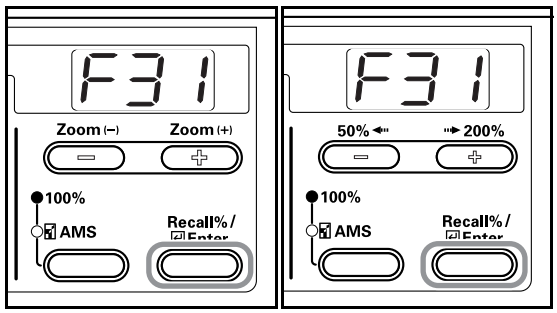

4 Press either the Zoom (+) key or the Zoom **(–)** key and select the amount of time for transition into Silent Mode.

Inch specifications **Metric specifications**

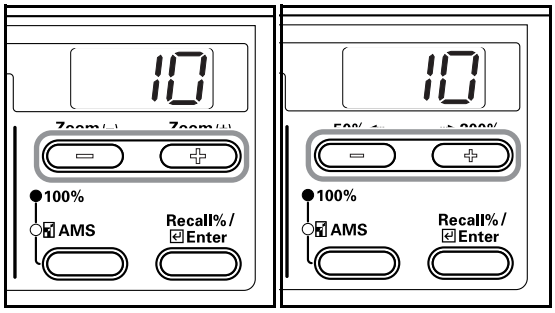

5 Press the [Enter] key.
The display will return to that of Step 2.

Inch specifications **Metric specifications**

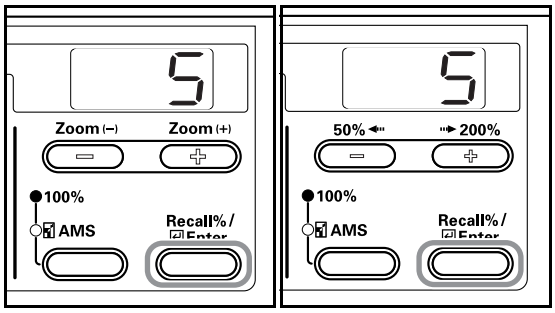

Auto Clear Setting

Set whether or not to automatically return the copier to "ready to copy" state when copying is finished.

1 Display the Default Settings Mode. (Refer to P.6-11 **"Default Settings Mode Operations Procedures"**.)

Inch specifications **Metric specifications**

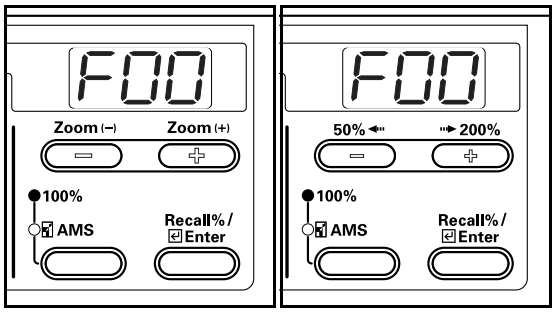

2 Press either the Zoom (+) or Zoom **(–)** key to display "F32".

Inch specifications **Metric specifications**

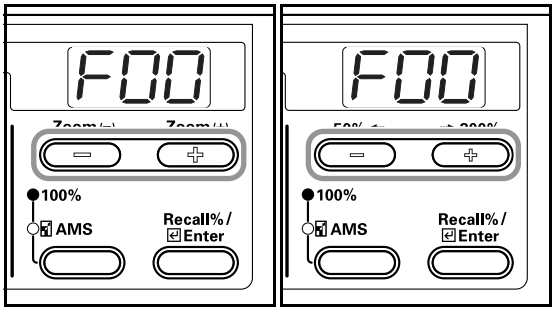

3 Press the [Enter] key.

Inch specifications **Metric specifications**

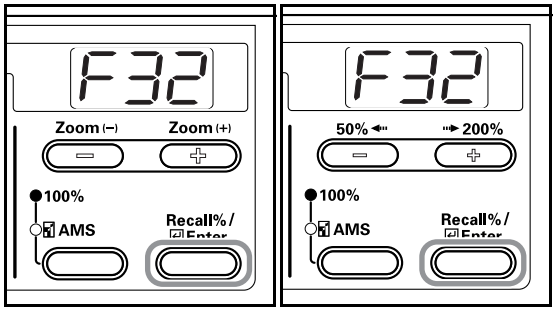

4 Press either the Zoom (+) or Zoom **(–)** key and select either "on" in the case where the transition to Auto Clear is to be made or "oFF" when it is not.

Inch specifications **Metric specifications**

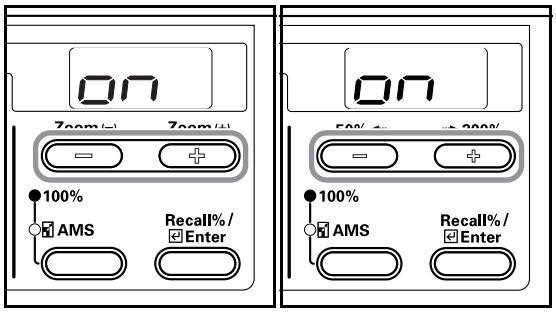

5 Press the [Enter] key.
The display will return to that of Step 2.

Inch specifications **Metric specifications**

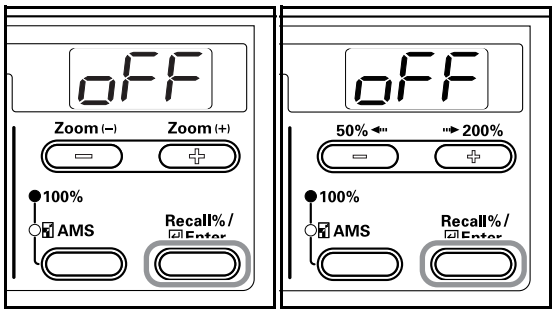

Auto Off Setting

Set whether or not to automatically enter Off Mode when copying is completed or after operations have been finished.

1 Display the Default Settings Mode. (Refer to P.6-11 **"Default Settings Mode Operations Procedures"**.)

Inch specifications **Metric specifications**

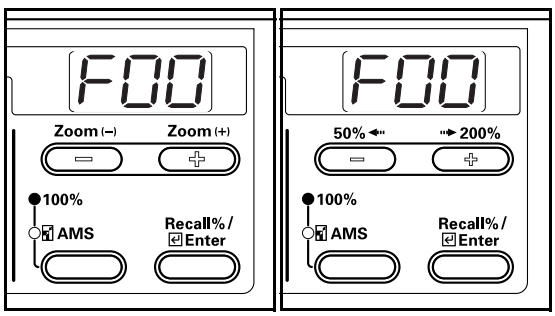

2 Press either the Zoom (+) or Zoom **(–)** key to display "F33".

Inch specifications **Metric specifications**

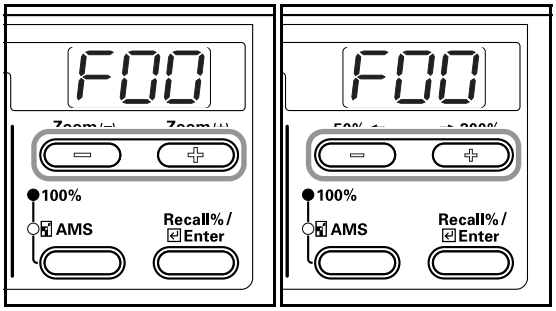

3 Press the [Enter] key.

Inch specifications **Metric specifications**

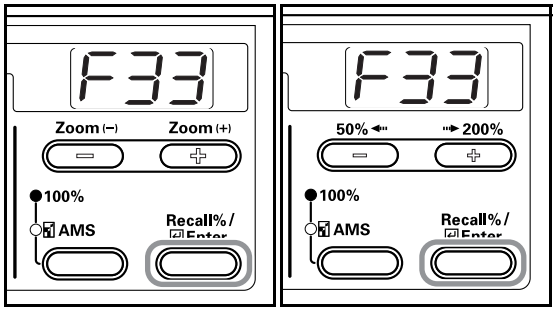

4 Press either the Zoom (+) or Zoom **(–)** key and select either "on" in the case when the transition to Auto Off is to be made or "oFF" when it is not.

Inch specifications **Metric specifications**

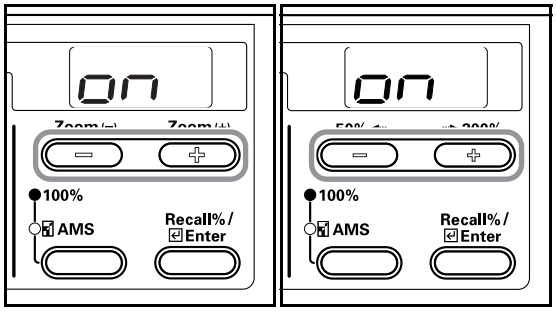

5 Press the [Enter] key.
The display will return to that of Step 2.

Inch specifications **Metric specifications**

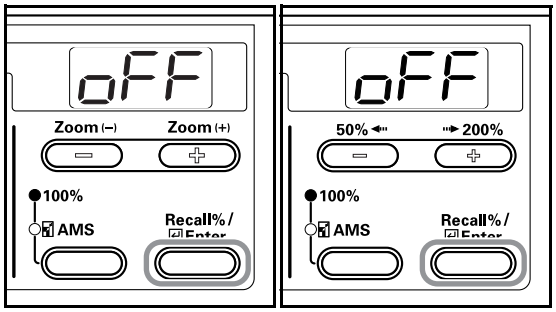

Note
If the Auto Off function interferes with your copy operations, disable the function. Before disabling the Auto Off function, you may want to try lengthening the amount of time before the Auto Off function engages.

Auto Clear Time

Set the time interval to automatically return the copier to "ready to copy" state when copying is finished.

1 Display the Default Settings Mode. (Refer to P.6-11 **"Default Settings Mode Operations Procedures"**.)

Inch specifications **Metric specifications**

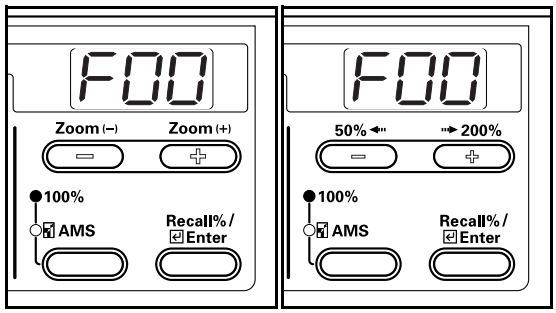

2 Press either the Zoom (+) or Zoom **(–)** key to display "F34".

Inch specifications **Metric specifications**

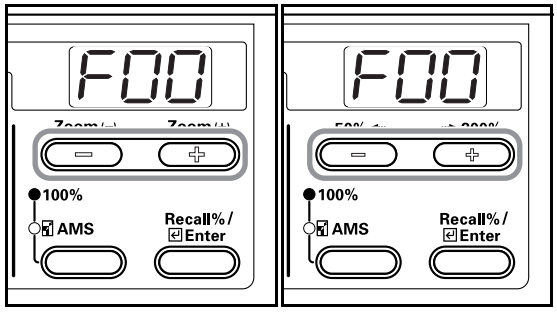

3 Press the [Enter] key.

Inch specifications **Metric specifications**

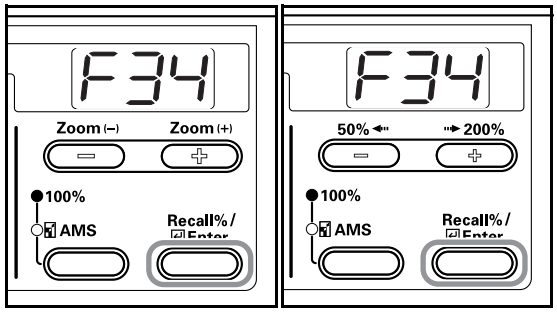

4 Press either the Zoom (+) key or the Zoom **(–)** key and select a time interval from 10 (seconds) to 270 (seconds).

Inch specifications **Metric specifications**

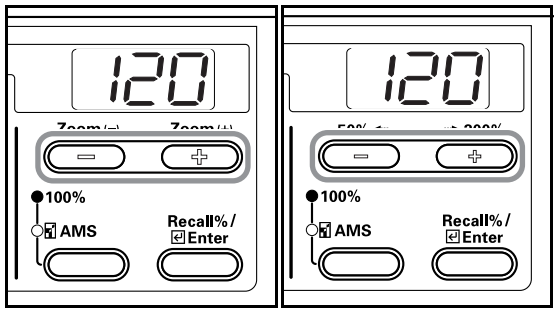

Notes
- Set the time interval to a longer length of time in the case where the copier is used often and to a shorter time interval when it is used infrequently.
- This can be set when the Auto Clear setting has been set to "on". (Refer to P.6-29 **"Auto Clear Setting"**.)

5 Press the [Enter] key.
The display will return to that of Step 2.

Inch specifications **Metric specifications**

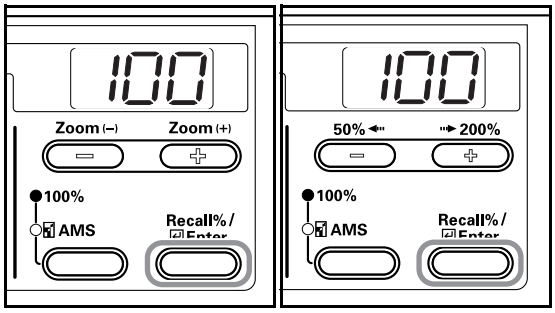

Low Power Mode Transition Time

Set the time interval from the time operations end to the automatic engagement of the Low Power Mode.

1 Display the Default Settings Mode. (Refer to P.6-11 **"Default Settings Mode Operations Procedures"**.)

Inch specifications **Metric specifications**

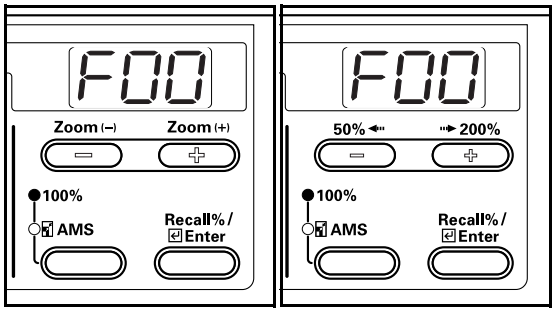

2 Press either the Zoom (+) or Zoom **(–)** key to display "F35".

Inch specifications **Metric specifications**

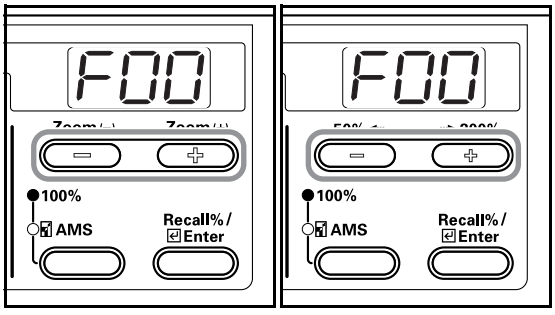

3 Press the [Enter] key.

Inch specifications **Metric specifications**

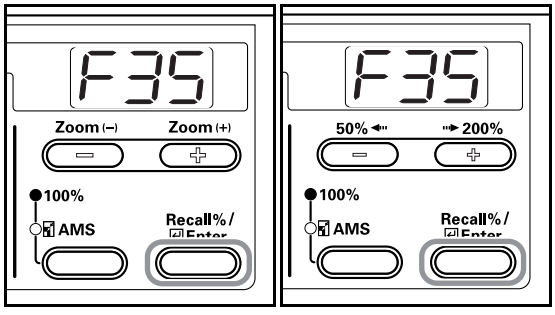

4 Press either the Zoom (+) key or the Zoom **(–)** key and select an time interval from 1 minute to 240 minutes.

Inch specifications **Metric specifications**

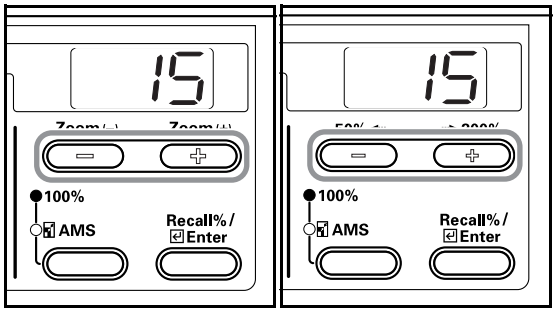

Note
The time intervals available are: 1, 5, 15, 30, 45, 60, 90, 120, 180 and 240 minutes.

5 Press the [Enter] key.
The display will return to that of Step 2.

Inch specifications **Metric specifications**

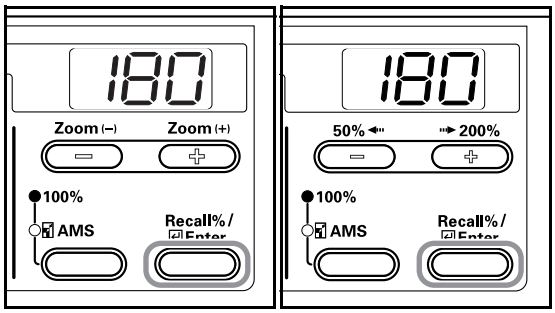

Off Mode Transition Time

Set the time interval for automatically entering Off Mode when copying is completed or after operations have been finished.

1 Display the Default Settings Mode. (Refer to P.6-11 **"Default Settings Mode Operations Procedures"**.)

Inch specifications **Metric specifications**

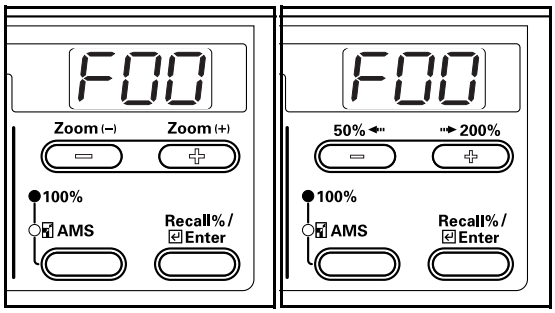

2 Press either the Zoom (+) or Zoom **(–)** key to display "F36".

Inch specifications **Metric specifications**

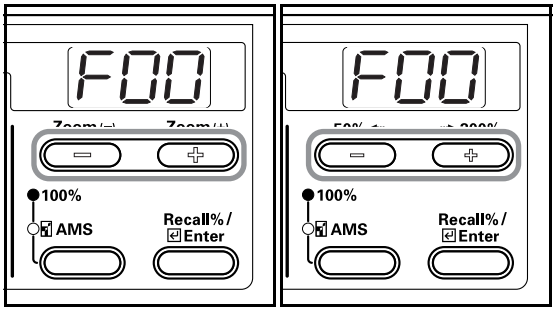

3 Press the [Enter] key.

Inch specifications **Metric specifications**

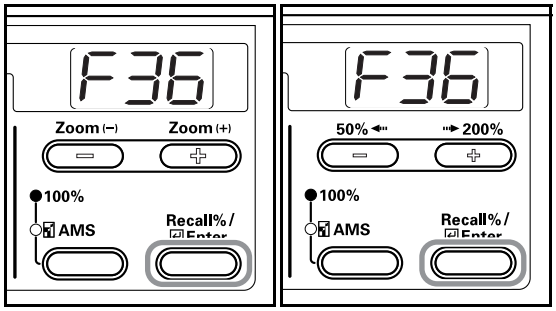

4 Press either the Zoom (+) key or the Zoom **(–)** key and select a time interval from 1 minutes to 240 minutes.

Inch specifications **Metric specifications**

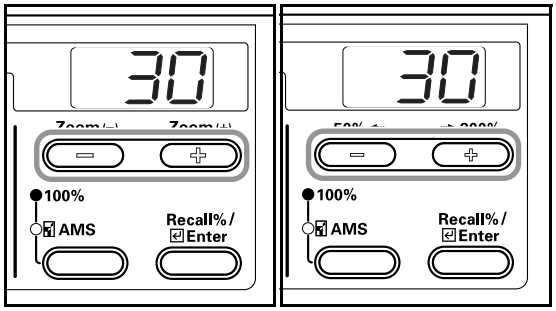

Notes

- This can be set when the Auto Off setting has been set to "on". (Refer to P.6-29 **"Auto Off Setting"**.)
- The time intervals that can be set are 1, 5, 15, 30, 45, 60, 90, 120, 180 and 240 minutes.

5 Press the [Enter] key.
The display will return to that of Step 2.

Inch specifications **Metric specifications**

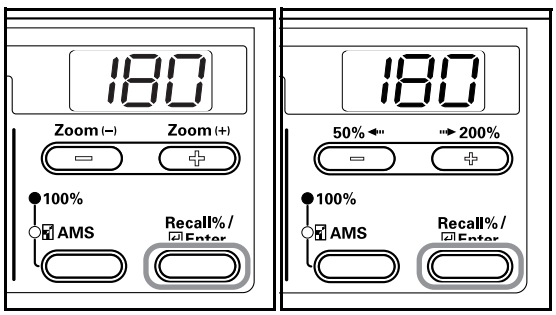

Alarm

The Alarm can be set to sound when a key on the Operation Panel is pressed or in cases when errors occur, etc.

1 Display the Default Settings Mode. (Refer to P.6-11 **"Default Settings Mode Operations Procedures"**.)

Inch specifications **Metric specifications**

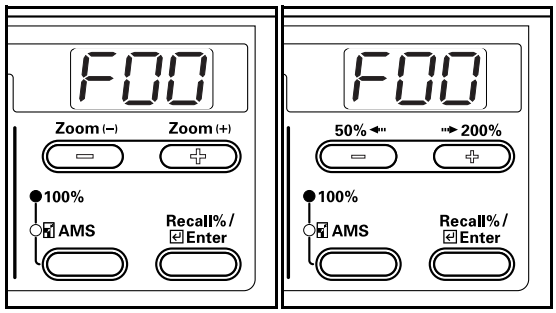

2 Press either the Zoom (+) or Zoom **(–)** key to display "F37".

Inch specifications **Metric specifications**

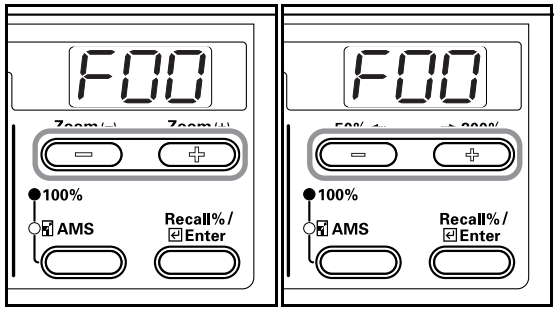

3 Press the [Enter] key.

Inch specifications **Metric specifications**

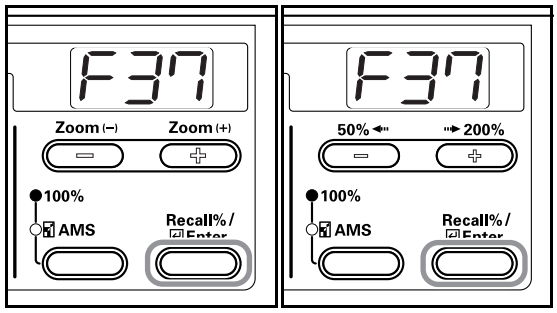

4 Press either the Zoom (+) or Zoom **(–)** key and select either "on" in the case where the alarm is to be sounded or "oFF" when it isn't to be sounded.

Inch specifications **Metric specifications**

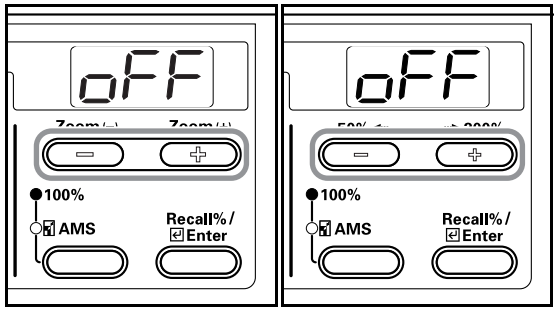

5 Press the [Enter] key.
The display will return to that of Step 2.

Inch specifications **Metric specifications**

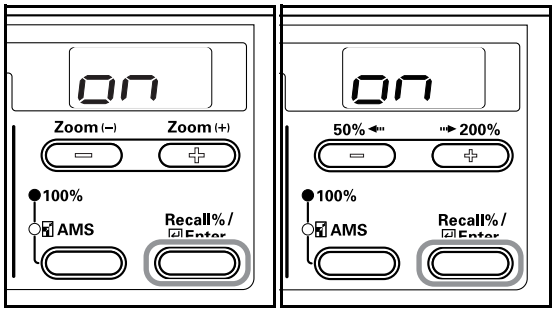

Toner Coverage Report

Output the report that shows the number of copies made and the average concentration of toner used for each paper size.

1 Display the Default Settings Mode. (Refer to P.6-11 **"Default Settings Mode Operations Procedures"**.)

Inch specifications **Metric specifications**

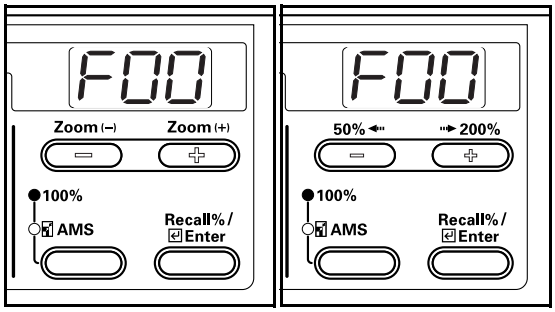

2 Press either the Zoom (+) or Zoom **(–)** key to display "F38".

Inch specifications **Metric specifications**

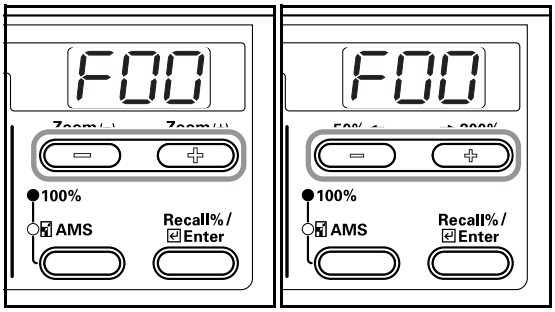

Note
Check to make sure that 11" × 8 1/2"/A4 size paper is loaded in the drawer.

3 Press the [Enter] key. The report will be output and the display will return to that of Step 2.

Inch specifications **Metric specifications**

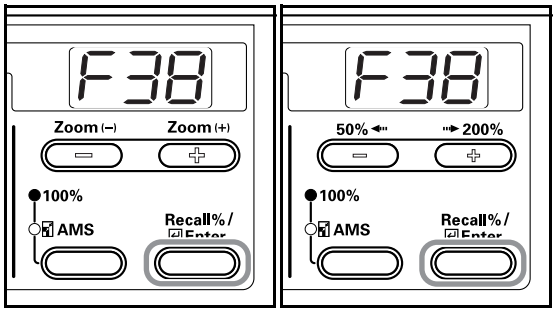

Sample: Toner Coverage Report

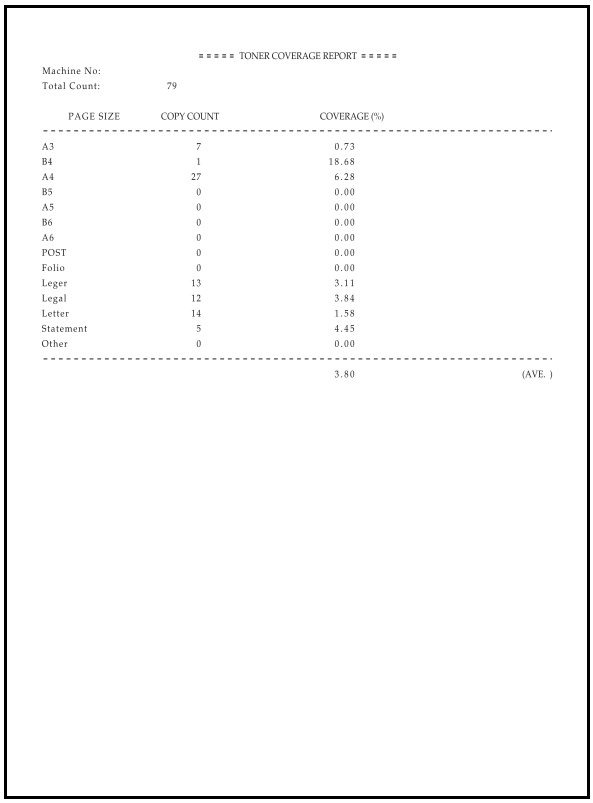

= = = = = TONER COVERAGE REPORT = = = = =

Machine No:
Total Count: 79

PAGE SIZE	COPY COUNT	COVERAGE (%)
A3	7	0.73
B4	1	18.68
A4	27	6.28
B5	0	0.00
A5	0	0.00
B6	0	0.00
A6	0	0.00
POST	0	0.00
Folio	0	0.00
Leger	13	3.11
Legal	12	3.84
Letter	14	1.58
Statement	5	4.45
Other	0	0.00
		3.80 (AVE.)

Checking the Total Counter and Printing Out the Counter Report

The Total Count can be viewed on the Operation Panel. A Counter Report can also be output.

1 Depress the [Stop/Clear] key for 3 seconds. The Copy Count will be displayed on the No. of Copies display.

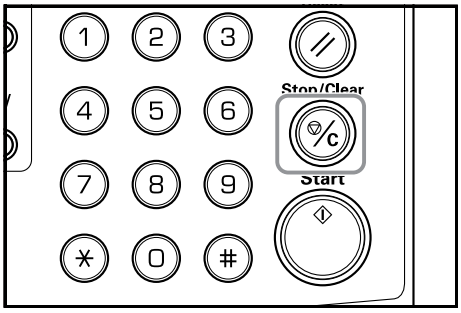

2 The Copy Count will be displayed three times in the following order. (The example shows a copy count of 1234 copies.)

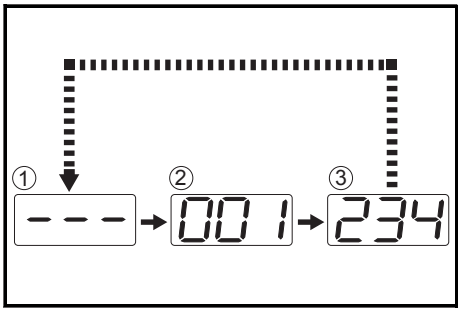

Note

Pressing on the [Start] key while the Copy Count is displayed will output the Counter Report. Check to make sure that 11" × 8 1/2"/A4 paper is available in the drawer before printing out the Counter Report.

Sample: Counter Report

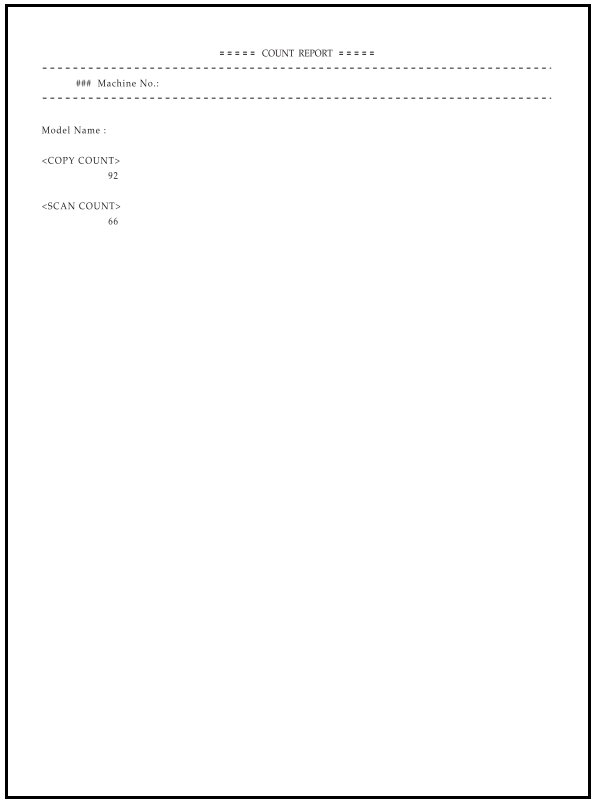

3 The copier will return to the state where copying can be continued after the Copy Count has been displayed.

Inch specifications **Metric specifications**

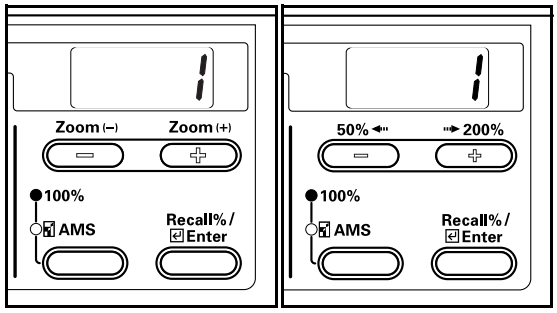

Section 7 OPTIONAL EQUIPMENT

Document Processor

The Document Processor automatically feeds one-sided originals one by one for scanning. If also reverses two-sided originals automatically for duplex copying and page separation copying.

Originals that can be used with the Document Processor

- Sheet originals only.
- Single-sided originals that have a paper weight within the range of 45 g/m^2 to 160 g/m^2.
  Two-sided originals that have a paper weight within the range of 50 g/m^2 to 120 g/m^2.
- Sizes: 11" × 17" to 5 1/2" × 8 1/2", Oficio II, A3 to A5R, Folio
- No. of Sheets that can be loaded:
  50 sheets (50 - 80 g/m^2)
  (Note, however, that when in Mixed Size Mode, this number is reduced to 30 sheets.)

Notes on acceptable documents

Be sure NOT to use the following as originals in the Document Processor. In addition, originals with punched holes or perforations should be set so that the edge of the paper with the holes or perforations is facing away from the direction of insertion into the Document Processor.

- OHP film or other transparencies.
- Soft originals such as carbon or vinyl paper, or other originals that are curled, wrinkled or creased.
- Irregularly shaped originals, wet originals, or originals that have adhesive tape or glue on them.
- Originals bound with clips or staples. (If you must use such originals, be sure to remove the clips or staples, and straighten any curls, wrinkles or creases, before setting them in the Document Processor. Failure to do so may result in the originals being misfed.)
- Originals with cut-out sections or that have a slippery surface on either side.
- Originals on which any correction fluid is still wet.
- Originals with strong folds. (If you must use such originals, be sure to smooth out the folds before setting them in the Document Processor. Failure to do so may result in the originals being misfed.)
- Originals with sharp curves (when use of a curved original is unavoidable, straighten out the curves before setting it).

Section Names

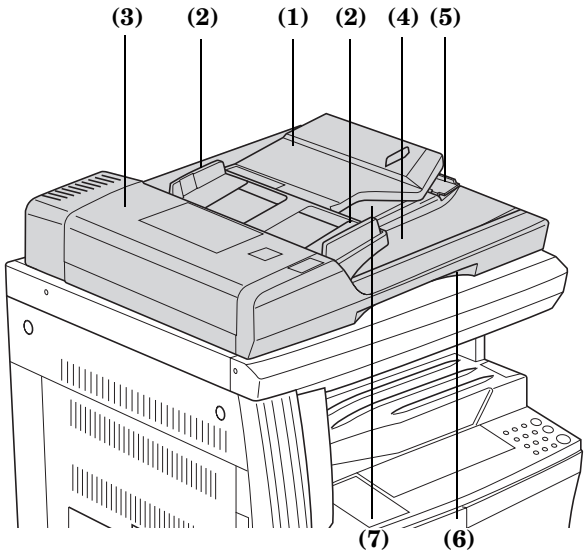

(1) Original Table
Set the original here.

(2) Original Insert Guides
Adjust these to match the size of the original.

(3) Left Cover
Open this when the original is jammed.

(4) Original Eject Table
Originals that have been copied are stored here.

(5) Ejection Extension
Open this when A3 or B4 originals are to be copied.

(6) Document Processor Open/Close Handle
Grasp this handle to Open/Close the Document Processor.

(7) Ejection Tray
The original will be temporarily ejected when copies of both sides are made.

Setting Originals in the Document Processor

1 Adjust the Original Insert Guides to match the size of the original.

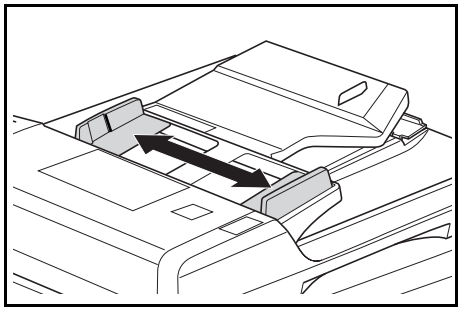

Notes

- Check to make sure that there are no ejected originals remaining on the Original Eject Table before setting the original. Originals left on the Original Eject Table may cause the original to jam.

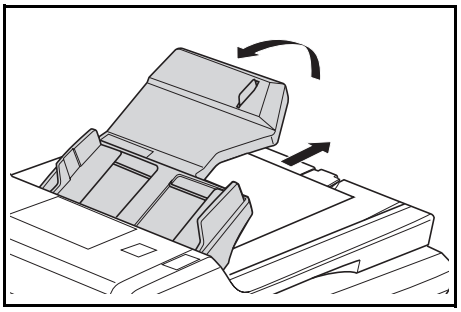

- When setting multiple originals at the same time, make sure that they are all of the same size. Note, however, that when setting originals in the Mixed Original Sizes Mode, originals with the same width, such as 11" × 17" to 11" × 8 1/2", A3 or A4, can be set at the same time. (Refer to P.7-3.)

2 Place the originals to be copied with the side to be copied facing up (in the case of 2-Sided copies, place them with the Front side facing up) and place them in order on the Originals Table.

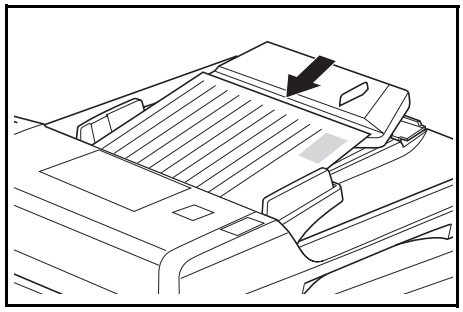

IMPORTANT!

- Set the originals below the scale gradation pasted on the rear original insert guide. Setting more than the acceptable number of originals may lead to the originals jamming. (Refer to P.7-1 for the number of originals that can be set.)

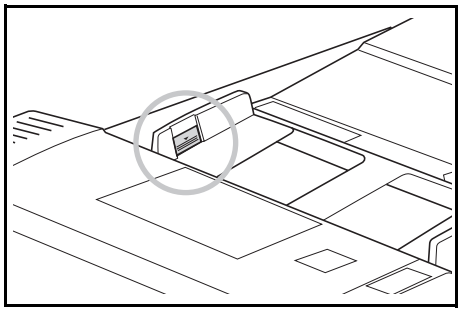

- When setting 11" × 17", 8 1/2" × 14", A3 or B4 originals open the Ejection Extension to prevent the originals from falling after ejection.

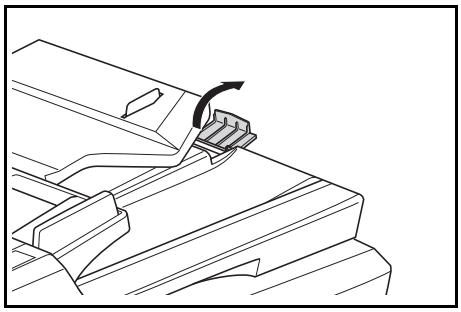

- In the case of Front and Back originals, the originals will be turned over so the originals will be temporarily ejected into the Ejection Tray. Do not handle the originals during this temporary ejection. Trying to pull an original out by force may cause a paper misfeed.

Setting the Original on the Platen

When copying items such as books or magazines that cannot be set in the Document Processor, open the Document Processor and place the original on the platen.

1 Open the Document Processor by grasping the Document Processor Open/Close handle.

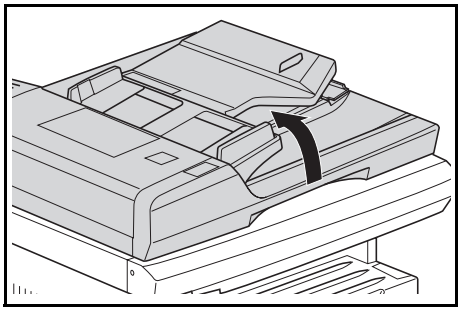

Note
Check to make sure that there are no originals remaining on the Original Table or on the Original Eject Table before opening the Document Processor. Originals left there may fall out when the Document Processor is opened.

2 Place the side to be copied so that it faces down. At this time, adjust the Original Size Indicator Plate to match the size of the original.

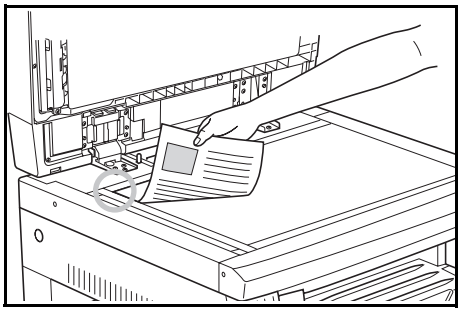

3 Shut the Document Processor by grasping the Document Processor Open/Close handle.

IMPORTANT!
Do not use excessive force to press the Document Processor onto the platen. The platen glass may break if excessive force is used.

⚠ CAUTION

Do not leave the copier with the Document Processor open. Doing so may lead to injuries.

Mixed Original Sizes (Auto Selection) Mode

When the original size has not been specified using the [Paper Select] key while using the Document Processor, the original sizes are detected one by one and each original is automatically copied to a sheet of the same size.

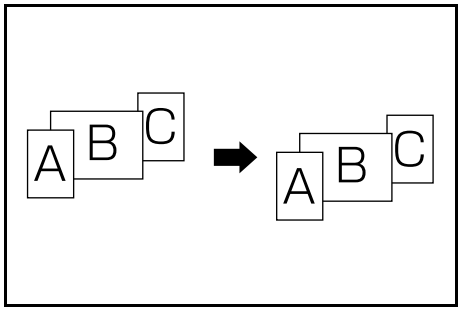

IMPORTANT!
- The maximum number of sheets that can be set in the Document Processor in this mode is 30 sheets.

[Inch specifications]
- Only 11" × 8 1/2" and 11" × 17", or 8 1/2" × 14" and 8 1/2" × 11" sizes.

[Metric specifications]
- Only A4 and A3, B5 and B4, or A4R and Folio sizes.

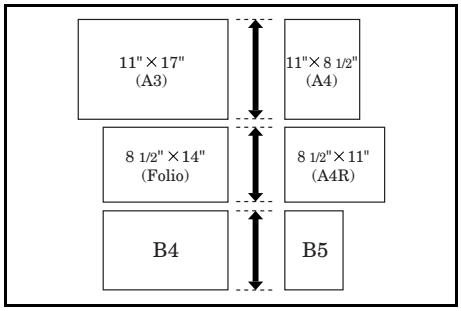

1 Set the originals in the Document Processor.

2 Press the [Auto Selection] key.
The Mixed Original Sizes Indicator will light up.

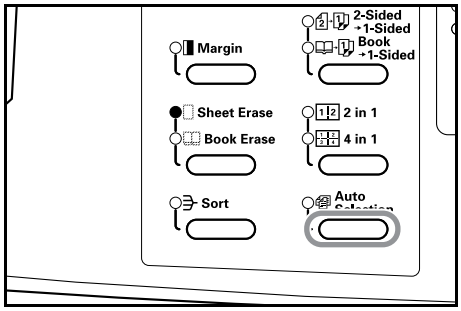

3 Press the [Start] key.
The copier will begin copying.

Paper Feeder

In addition to the drawer provided with the copier, a Paper Feeder (a 3-level device with a drawer that can hold 300 sheets) can also be used.

- The number of sheets that can be accommodated: 300 sheets (regular paper, 64 to 105 g/m^2).
- Sizes that can be set are: 11" × 17" to 5 1/2" × 8 1/2", Oficio II, A3, B4, A4, A4R, B5, B5R, A5R and Folio.

The drawer is set in the same way as the standard drawer provided with the main unit. Refer to P.3-1.

* The Left Cover has been provided to allow for the extraction of sheets when jamming occurs.

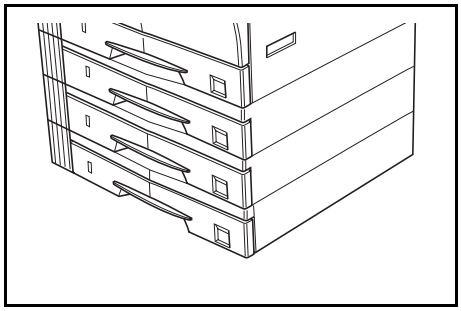

Duplex Unit

2-Sided copies can be made when the Duplex Unit is installed.
2-Sided copies of sizes from 11" × 17" to 5 1/2" × 8 1/2", Oficio II, A3 to A5R, Folio (64 - 90 g/m^2) can be made.

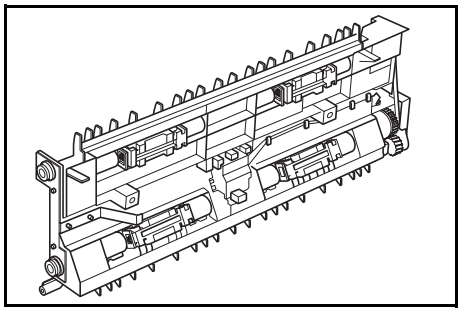

Key Counter

The Key Counter is used to confirm the amount of usage of the copier. It is useful in managing copier usage for each department, section, etc. as well as in the company overall.

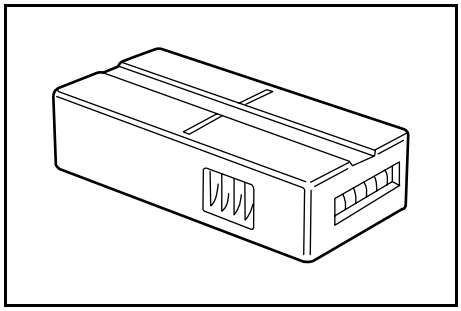

Setting the Key Counter

Set the Key Counter securely in the Key Counter Slot.

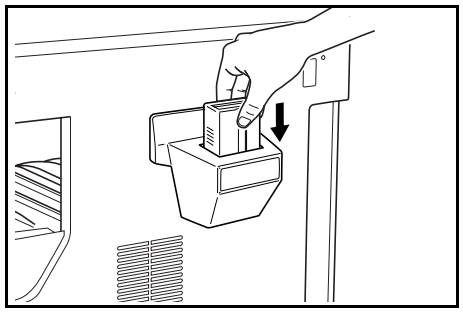

Note
In the case where the Key Counter is used, no one will be able to make copies until it is installed in the copier. "U1" will be displayed when the Key Counter has not been securely inserted.

Additional Memory

Memory can be increased. Increasing the amount of memory will increase the maximum number of originals that can be read in. 64MB and A128MB are effective in reading in photo originals at low compression ratios.
(16MB, 32MB, 64MB, 128MB)
16MB: 250 sheets, 32MB: 250 sheets, 64MB: 250 sheets, 128MB: 250 sheets (11" × 8 1/2" blackness ratio 6% originals)

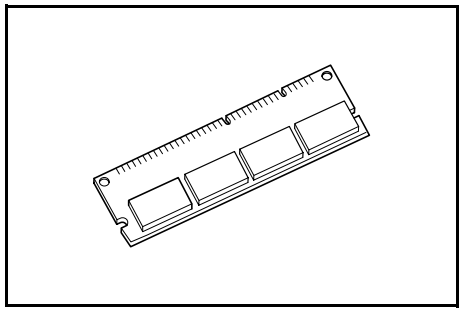

Section 8 TROUBLESHOOTING

If one of the following indications is Displayed

Carry out the corresponding corrective procedure when any of the error messages shown in the table below are displayed.

Display	Corrective Procedure	Reference Page
"E12" appears on the copy quantity display.	No 11" × 8 1/2"/A4 size paper was available in either the drawer or the Paper Feeder (multi-bypass tray) at the time when the report was attempted to be output. Press the [Paper Select] key and select the supply drawer, then press the [Start] key. Paper will be supplied from the drawer selected.	–
"E14" appears on the copy quantity display.	An original size that cannot be copied has been set. Check the original. • The original was set in a vertical direction during the Book Border Erasure copying operation. Set the original horizontally. • An irregular size original was set during the Border Erase or Merge Copy operation. • An original size other than 8 1/2" × 11", 11" × 17", A3, A4R, A5R, B4 or B5R was set to make a split copy or a 2-Sided Copy from a double-page spread original.	5-8 5-8, 5-10 5-4
"E15" appears on the copy quantity display.	A size that cannot be copied on both sides has been specified. 2-Sided copies cannot be taken when A6R, B6R, Postcard, Irregular Size or the paper size has not been specified. Specify a paper size that can be used.	5-1
The Toner Waste display blinks on and "E31" appears on the copy quantity display.	The waste toner box is full. Replace it with a new waste toner box.	9-4
"E32" appears on the copy quantity display.	The Toner Container has not been set. Set the Toner Container.	9-4
The Replenish Toner display blinks on and off.	There is very little toner remaining. Copying can be continued for a short while before running out of toner. Replace the toner container with a new one as soon as possible.	9-4
The Replenish Toner display blinks on and "E33" appears on the copy quantity display.	Copies cannot be produced because there is no toner. Replace the toner container with a new one.	9-4
"E70" appears on the copy quantity display.	If the optional Document Processor is being used, there are originals left on the original table. Remove the originals, return them to the original table and try copying them again.	–
"E71" appears on the copy quantity display.	The copier will try to make copies of the originals it could not copy before. Return all of the originals to the original table and try copying them again.	–
"E72" appears on the copy quantity display.	Originals were set in the optional Document Processor when copying on 2-sides (front and back sides), when copying from the platen in 2-Sided copy, 2 in 1, 4 in 1 or when sorting copies. Remove the originals from the Document Processor, replace the originals on the Original Table after exiting the front and back copying, 2-Sided copy, 2 in 1, 4 in 1 or Sort Mode and resume copying.	–
"E90" appears on the copy quantity display.	Memory is full. Press the [Enter] key to start outputting the copies read in. Press the [Reset] key or the [Stop/Clear] Key to delete the data read in. Reduce the number of originals and repeat the copying procedure.	–

Display	Corrective Procedure	Reference Page
“E91” appears on the copy quantity display.	Copies cannot be produced because memory is full during the interrupt copy operation. Interrupt Copying cannot be carried out so press the [Stop/Clear] key and then press the [Interrupt] key again after the data read in has been deleted to exit the Interrupt Copying. After the copying operation for the interrupted copy has been completed, repeat the procedure again.	
“OP” appears on the copy quantity display.	The front cover of the copier is open. Close the front cover.	–
“OP1” appears on the copy quantity display.	The left cover of the Document Processor is open. Close the left cover. Close the front cover.	–
“OP2” appears on the copy quantity display.	The left cover of the copier is open. Close the left cover.	
“OP3” – “OP5” appears on the copy quantity display.	The left cover of the optional drawer is open. Close each of the left covers.	–
“C” and a number are alternately displayed on the copy quantity display.	Make a note of the C and the number. Turn the power switch OFF, unplug the power cord and contact your service representative.	–
“A” and a number are alternately displayed in the copy quantity display. (except A-3200)	Turn the power switch OFF/ON. Usage will be possible again once the regular display returns. When A and the number are again displayed on the copy quantity display, make a note of the A and the number. Turn the power switch OFF, unplug the power cord and contact your service representative.	–
“A3” and “200” are displayed alternately in the copy quantity display.	Condensation is occurring within the copier. Turn the Power Switch OFF and then turn it ON again after 10 to 20 minutes have elapsed.	–
The Paper Misfeed display blinks on and off and “JXX” appears on the copy quantity display. XX indicates the paper misfeed location numerically.	A paper misfeed has occurred. Remove the jammed paper.	8-3
“OF” appears on the copy quantity display.	250 copies have been stored in the storage section. Remove the paper, press the [Start] key and resume copying.	–
The Periodic Maintenance indicator blinks on and off.	This is a notification that the time for periodic maintenance is approaching.	–
The Periodic Maintenance indicator lights up.	It is time for Periodic Maintenance. Contact your service representative.	–
The Paper Supply indicator lights up and “PE” appears on the copy quantity display.	There is no paper in the drawer level that corresponds to the lighting indicator. Replenish the paper and set the drawer.	3-1
“PF” appears on the copy quantity display.	Check the Multi-bypass Tray paper. Set paper in the Multi-bypass Tray in the event there is no paper present there. When the Multi-bypass Tray paper fails to be fed, reset the paper.	3-4
“U1 appears on the copy quantity display.	Check the key counter or key card and make sure it is set properly.	7-4
“= = =” appears on the copy quantity display.	Department Management being set. Use the Keypad to enter the assigned Section Code to perform copying operations. Press the [Management] key after copying is finished to display “= = =” again.	6-6
“-” appears on the copy quantity display.	The copier is in the Off mode setting. Press the [Energy Saver] key to exit the mode.	4-8
“---” appears on the copy quantity display.	The copier is in the Low Power mode setting. Press any key to exit the mode or in the case where the optional Document Processor is installed, set an original in the Document Processor.	4-7

If paper jams

Stop copying operations when a paper misfeed occurs. When a paper misfeed occurs, the indicator for the location of the paper misfeed will light up on the Operation Panel and either "J" plus a 2-digit number or "PF" will be displayed as notification of the location of the paper misfeed.
With the Power Switch in the ON (|) position, refer to P.8-3 **"Removal Procedure"** and clear the paper misfeed.

Inch specifications **Metric specifications**

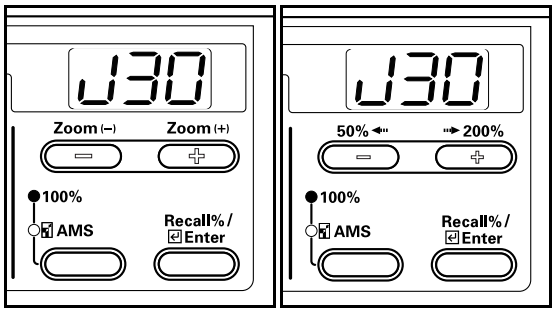

Misfeed location indicators

(1) Paper misfeed in the paper supply section – Refer to P.8-3.
(2) Paper misfeed in the left cover internal section – Refer to P.8-4.
(3) Paper misfeed in the optional Document Processor – Refer to P.8-5.
(4) Paper misfeed in the optional drawer – Refer to P.8-6.

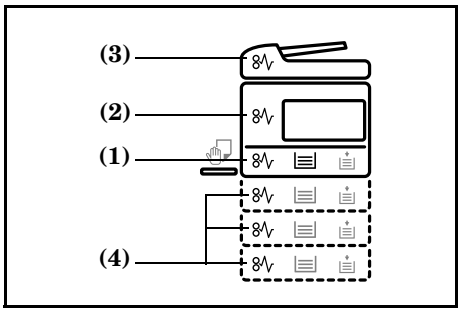

Cautions

WARNING

The electrically charged section inside the main unit of the copier uses high voltage. Exercise caution in handling it to prevent electric shock.

CAUTION

The fixation section inside the main unit of the copier is extremely hot. Exercise caution in handling it to prevent getting burned.

* Do not attempt to reuse paper that has jammed before.
* When a sheet gets torn during removal, make sure that the remnants do not remain in the machine. Failure to completely remove remnants of torn pages can lead to paper misfeeds.
* The copier will start warm up operations after the paper misfeed processing has been completed. The paper misfeed indicator lamp will go off and the copier will be restored to the state it was in before the paper misfeed occurred.

Removal Procedure

Paper misfeed in the paper supply section

Paper misfeed in the drawer (J11, J21)

When the paper misfeed location is lit as shown in the illustration below, the paper misfeed has occurred in the drawer. Use the procedure below to clear it.

Inch specifications **Metric specifications**

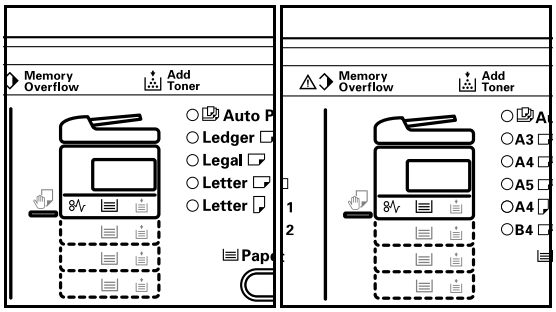

1 Pull the drawer out.

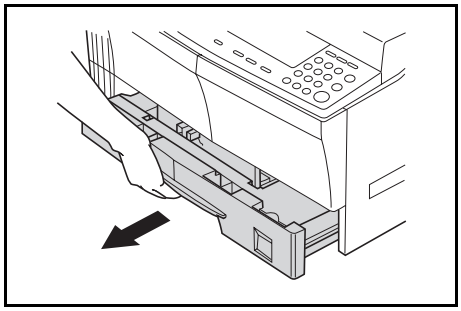

2 If a sheet of paper is jammed inside, remove it carefully so as not to tear it.

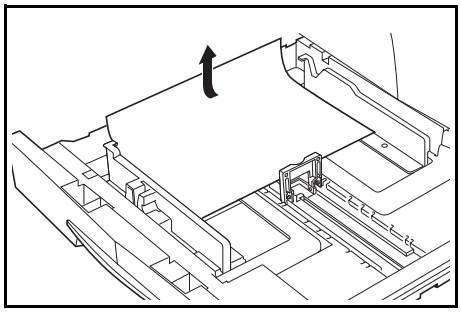

Note
If the paper is torn, be sure to remove all remnants or fragments from the drawer.

3 Firmly push the drawer back into its original position.

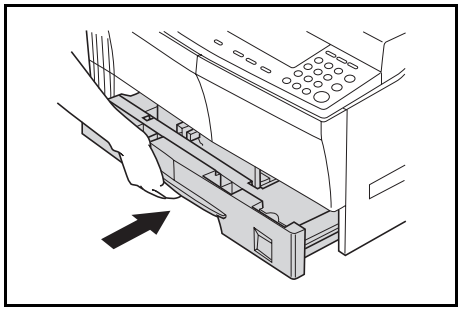

Notes
- Check to see that there is no paper sticking out from the guides in the drawer. If paper is sticking out, recheck the drawer.
- In the case where "J21" is displayed, refer to P.8-4 **"Paper misfeed in the Left Cover internal section (J30, J40 to 45, J50, J52 to 56, J60, J61)"** and remove the paper.

Paper misfeed in the Multi-bypass Tray (PF, J20)

When the paper misfeed location is lit as shown in the illustration below, the paper misfeed has occurred in the Multi-bypass Tray. Use the procedure below to clear it.

Inch specifications **Metric specifications**

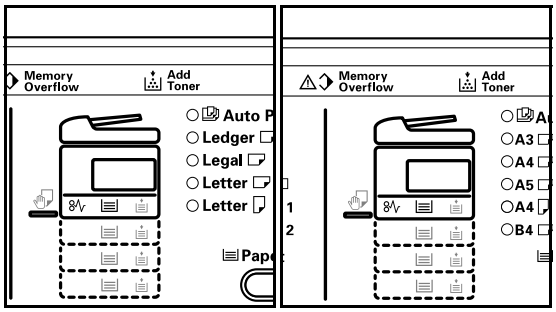

1 Remove all of the Multi-bypass Tray paper.

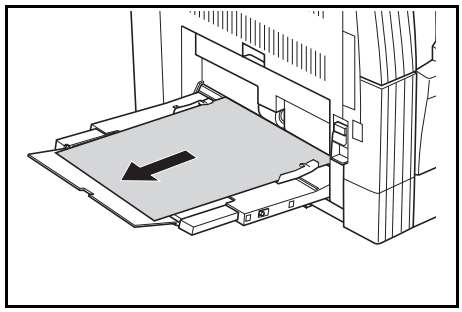

2 Check to see that the paper misfeed indicator lamp has gone out and then set the Multi-bypass Tray paper again.

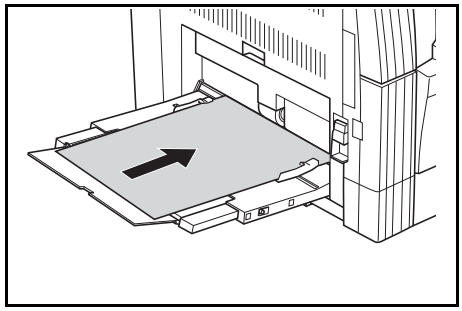

Note
In the case where "J20 is displayed, refer to P.8-4 **"Paper misfeed in the Left Cover internal section (J30, J40 to 45, J50, J52 to 56, J60, J61)"** and remove the paper.

Paper misfeed in the Left Cover internal section (J30, J40 to 45, J50, J52 to 56, J60, J61)

When the paper misfeedpaper misfeed location is lit as shown in the illustration below, the paper misfeed has occurred in the Left Cover internal section. Use the procedure below to clear it.

Inch specifications **Metric specifications**

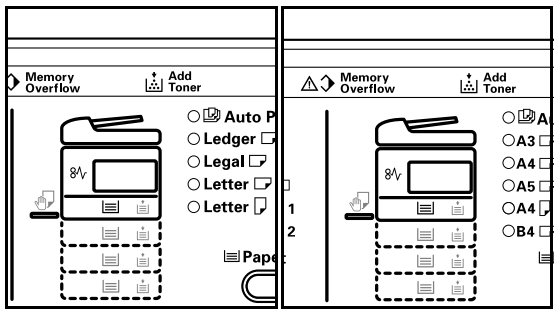

Note
Supplementary Information
The drum section inside the main unit is sensitive to scratches and contaminants. When removing paper, be careful not to touch it or scratch it with your watch, ring, etc.

1 Grasp the Left Cover handles to lift the cover and open it.

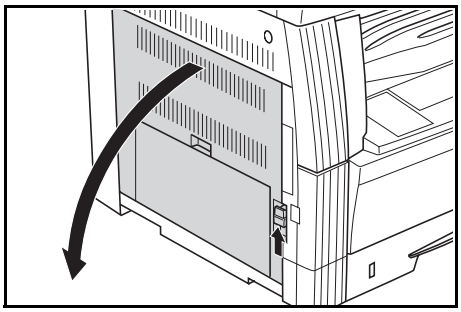

CAUTION

The fixation section inside the main unit of the copier is extremely hot. Exercise caution in handling it to prevent getting burned.

2 Remove jammed sheets of paper carefully so as not to tear them.

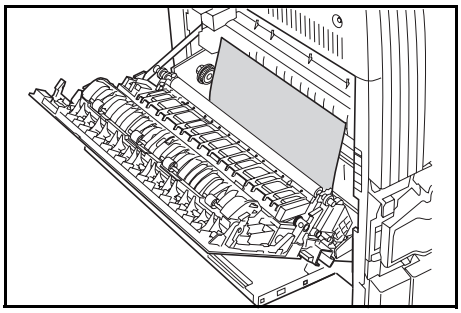

Note
If the paper is torn, be sure to remove all remnants or fragments from the drawer.

3 If the Duplex Unit (option) is installed, lift it up and remove the paper.

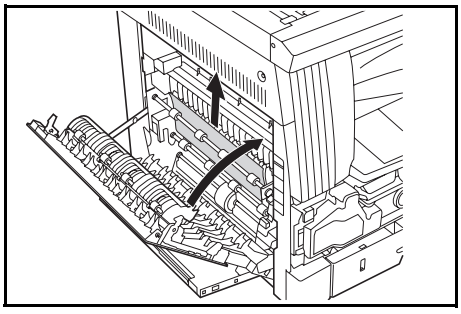

Note
If the paper is torn, be sure to remove all remnants or fragments from the drawer.

4 Close the front cover.

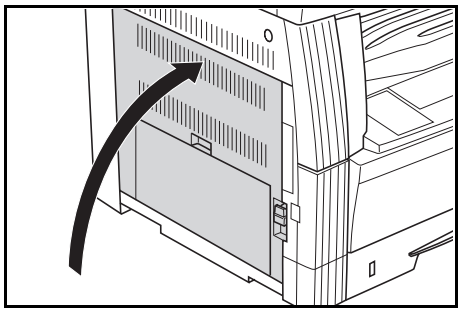

Paper misfeed in the Document Processor (option) (J70, J71, J72, J73, J74, J75)

When the paper misfeed location is lit as shown in the illustration below, the paper misfeed has occurred in the optional Document Processor. Use the procedure below to clear it.

Inch specifications **Metric specifications**

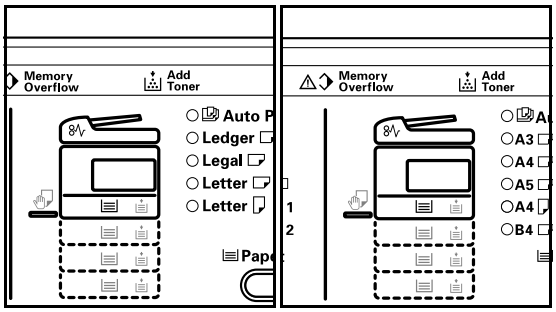

1 If there are originals on the Original Table, remove them.

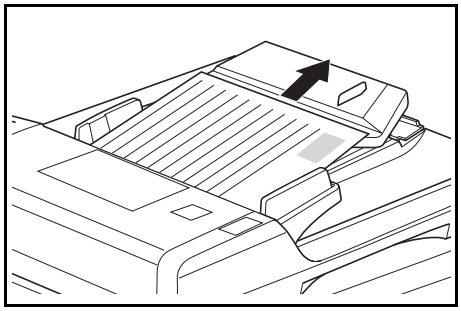

2 Open the Left Cover.

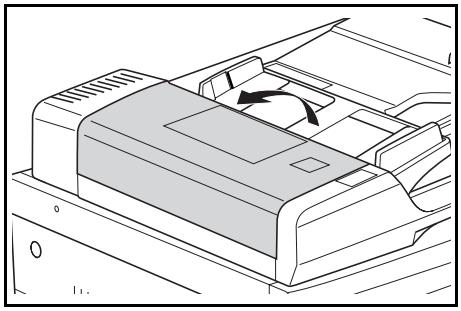

3 If an original is jammed inside, remove it carefully so as not to tear it.

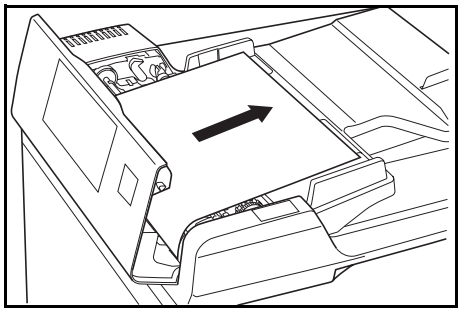

Note
If the original is torn, be sure to remove all remnants or fragments of it from the drawer. Failure to completely remove remnants of torn pages can lead to paper misfeeds.

4 Lift up the Paper Supply Unit (1).

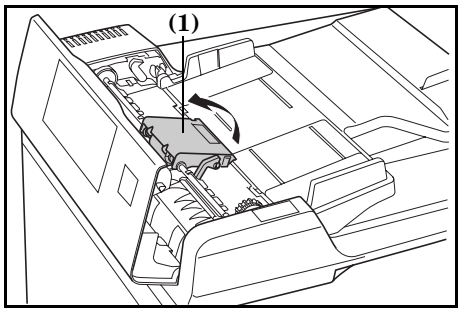

5 If an original is jammed inside, remove it carefully so as not to tear it.

Note
If the original is torn, be sure to remove all remnants or fragments of it from the drawer.

6 Rotate the dial as shown in the illustration and remove the original.

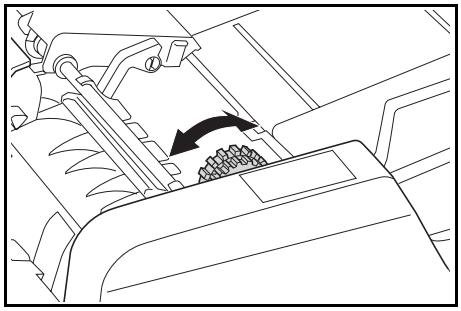

7 Close the Left Cover to return it to its original position. Add the original that was jammed to the originals on the Original Table and resume copying.

Paper misfeed in the optional drawer (J12, J13, J14, J15, J16, J22, J23, J24)

When the paper misfeed location is lit as shown in the illustration below, the paper misfeed has occurred in the optional drawer. Use the procedure below to clear it.

Inch specifications **Metric specifications**

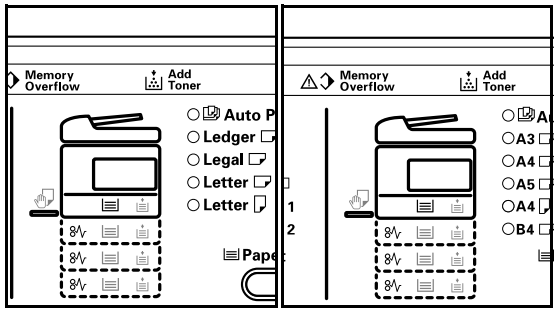

1 Remove the left cover of the drawer being used.

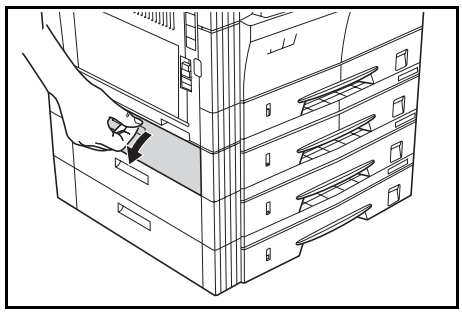

2 If a sheet of paper is jammed inside, remove it carefully so as not to tear it.

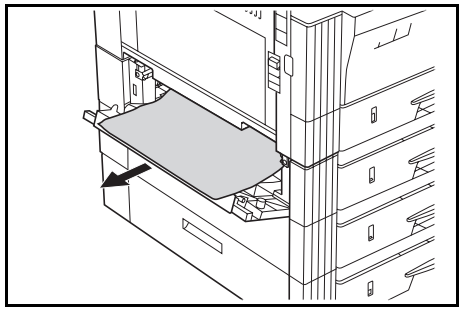

Note
If the paper is torn, be sure to remove all remnants or fragments from the drawer.

3 Close the left cover of the drawer.

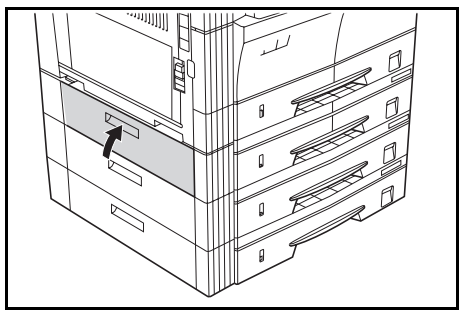

4 Pull the drawer out.

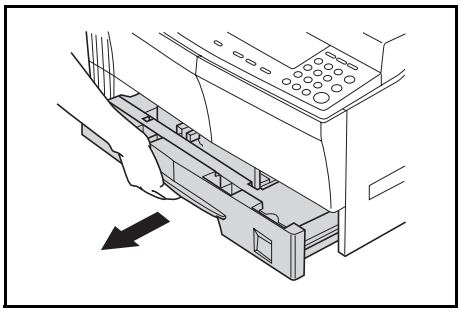

5 If a sheet of paper is jammed inside, remove it carefully so as not to tear it.

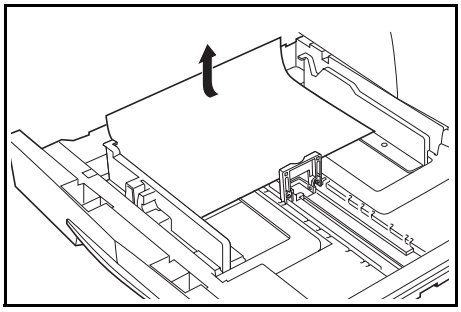

Note
If the paper is torn, be sure to remove all remnants or fragments from the drawer.

6 Gently push the drawer back into its original position.

If other trouble occurs

Check the following items when trouble occurs. If the problem is not resolved after checking these items, contact your service representative.

Symptom	Items to Check	Corrective Procedure	Reference Page
Nothing displays on the Operation Panel even though the Power Switch is ON.	Check to make sure the copier is plugged into the outlet.	Plug the copier power cord into the outlet.	–
No copy is produced when the [Start] key is pressed.	Check to see if something has been displayed on the Operation Panel.	Check the corrective procedure for the error display and carry it out.	8-1
Nothing appears on the copy.	Check to see that the original has been set properly.	Place the original face down on the platen and adjust the Original Size Indicator Plate to match its size. Place the original face up when setting it in the optional Document Processor.	4-1 7-2
A light copy is produced.	Check to see if the copier is in Auto Exposure Mode.	When the exposure is to be changed overall, perform out the “Auto Exposure Adjustment”.	6-14
	Check to see if the copier is in Manual Exposure Mode.	Use the Exposure Adjustment key to set the proper exposure.	4-2
		When the exposure is to be changed overall, perform the Manual Exposure Adjustment in each original mode.	4-2
	Check to see if the toner in the toner container is canted.	Shake the Toner Container left and right for approximately 10 times.	9-6
	Check to see if the Add Toner Indicator is lit.	Replace the Toner Container.	9-4
	Check to see if the paper is damp or not.	Replace the paper with new paper.	–
	Check to see if the electrical charge section is dirty or not.	Open the front cover and use the Cleaning Rod to clean the electrical charge section.	9-5
Dark copies are produced.	Check to see if the copier is in Auto Exposure Mode.	When the exposure is to be changed overall, perform out the “Auto Exposure Adjustment”.	6-14
	Check to see if the copier is in Manual Exposure Mode.	Use the Exposure Adjustment key to set the proper exposure.	4-2
		When the exposure is to be changed overall, perform the Manual Exposure Adjustment in each original mode.	4-2
Spotting (the shading fails to line up uniformly and spots occur).	Check to see whether the original is a printed original or not.	Select “Photos” in the Image Quality Mode.	4-2
The copy is not clear.	Check to see whether an Image Quality Mode that matches the type of original being copied has been selected or not.	Select the appropriate Image Quality Mode.	4-2
The copy is dirty.	Check to see if the Platen or Original Cover is dirty.	Clean the Platen and Original Cover.	9-1

Symptom	Items to Check	Corrective Procedure	Reference Page
The copy image is skewed.	Check to see that the original has been set properly.	Make sure that the original is correctly set against the Original Size Indicator Plate when placing the original on the platen. When setting the original in the optional Document Processor make sure that the original is correctly aligned with the original insertion guide.	4-1 7-2
	Check to see that the paper has been set properly.	Check the position of the Width Guide in the drawer.	3-1
Paper misfeeds occur frequently	Check to see that the paper has been loaded properly in the drawer.	Set the paper correctly.	3-1
		Depending on the type of paper and its storage condition, there may be cases in which the copies curl. This may lead to paper misfeeds. Remove the paper, turn it over and then replace it.	–
	Check to see if the paper is curled, creased or wrinkled.	Replace the paper with new paper.	–
	Check to see if fragments of paper or a jammed sheet is in the copier.	Use an appropriate method to remove the fragment or jammed sheet of paper.	8-3
	Check to see if the paper size actually set in the Multi-bypass Tray and the Multi-bypass Tray Size set are different or not.	Match the paper size of the paper set in the Multi-bypass Tray and the Multi-bypass Tray Size setting.	–
Black streaks appear on the copy when the optional Document Processor is used.	Check to see if the slit glass is dirty.	Clean the slit glass if it is dirty. In addition, you can set the Processing to Reduce Black Streaks when black streaking occurs to make the streaking unnoticable.	9-1 6-17
Wrinkling occurs in copies.	Check to see if the separation pawl is dirty.	Clean the separation pawl if it is dirty.	9-2
A white or black lengthwise line shows up on copies.	Check to see if the electrical charge section is dirty or not.	Open the front cover and use a cleaning rod to clean it.	9-5
White spots appear on copies.	Check to see if the transfer rollers are dirty.	Scrub the transfer rollers with a cleaning brush to clean them.	9-2

Section 9 MAINTENANCE AND OPERATION INFORMATION

Cleaning the Copier

⚠ CAUTION

Remove the power plug from the outlet during cleaning operations as a safety precaution.

Cleaning the Original Cover

Open the Original Cover and use a cloth dampened with alcohol or a dilute neutral detergent to clean the underside of the Original Cover.

IMPORTANT!
Do not use thinner, organic solvents etc.

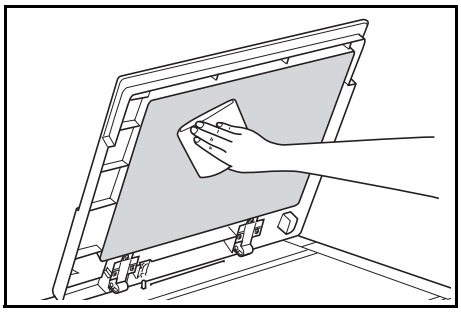

Cleaning the Platen

Open the Original Cover and use a cloth dampened with alcohol or a dilute neutral detergent to clean the Platen.

IMPORTANT!
Do not use thinner, organic solvents etc.

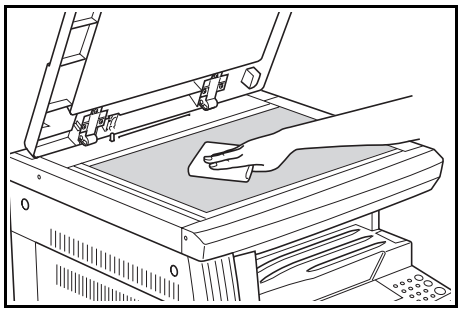

Cleaning the Slit Glass

When black streaks appear on copies when using the optional Document Processor, this means that the Slit Glass **(a)** is dirty. Use a soft dry cloth to clean the slit glass.

IMPORTANT!
Do not use water, thinner, organic solvents, alcohol, etc.

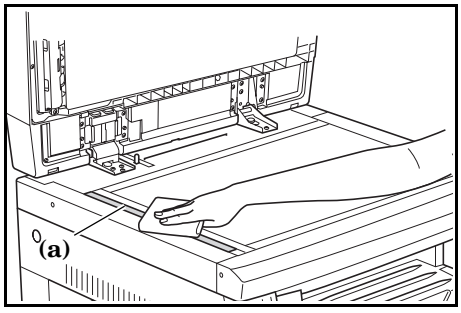

* Refer to P.9-4 **"Replacing the Toner Container and Waste Toner Box"** for instructions for cleaning the inside of the copier.

Cleaning the Separation Pawl

1 Open the front cover.

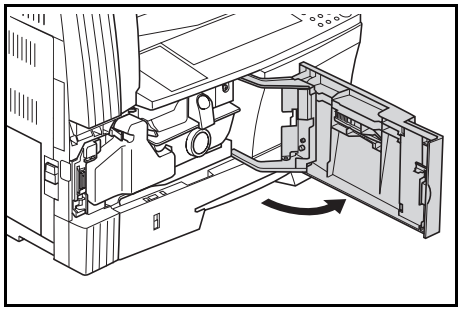

2 Remove the cleaning brush.

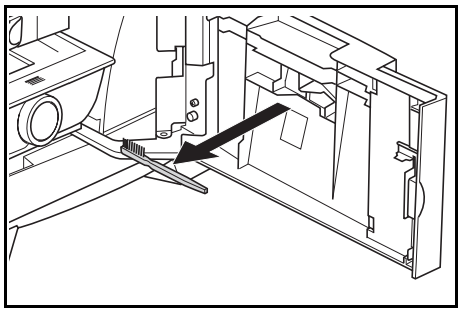

3 Grasp the Left Cover handles to lift the cover and open it.

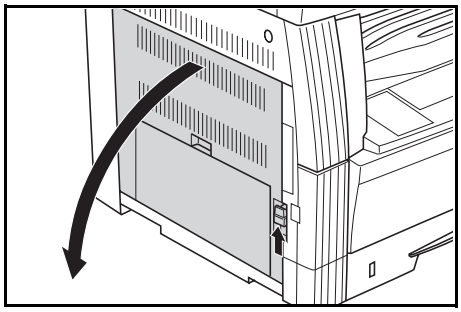

4 Brush from the left side to the right side along the separation pawl as shown in the illustration to remove any dirt or dust.

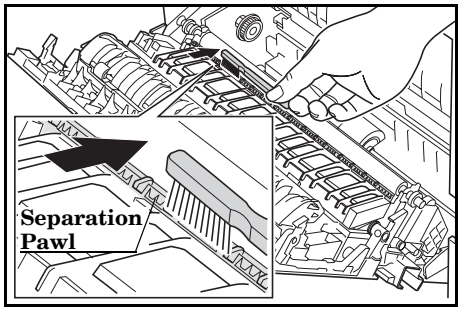

5 Close the front cover.

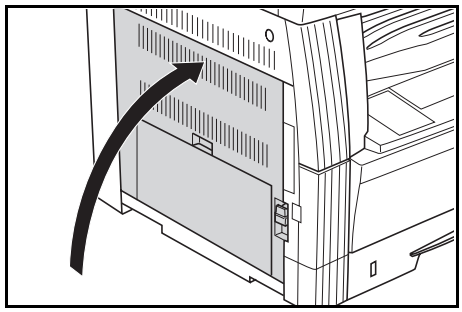

Cleaning the Transfer Rollers

1 Open the front cover.

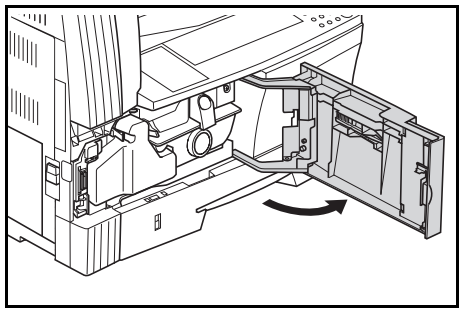

2 Remove the cleaning brush.

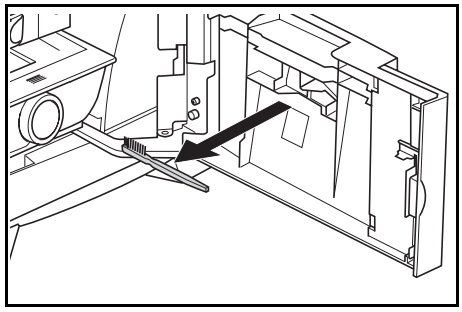

3 Grasp the Left Cover handles to lift the cover and open it.

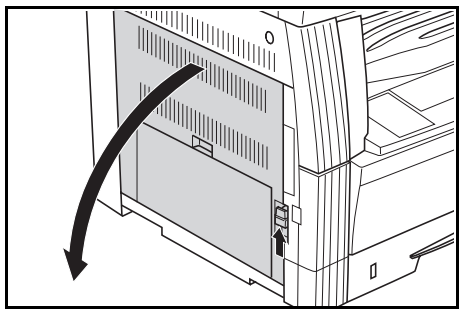

4 Turn the Left Transport Roller gear as shown in the illustration and move the brush from left to right while turning the gear to remove any dust or dirt on the rollers.

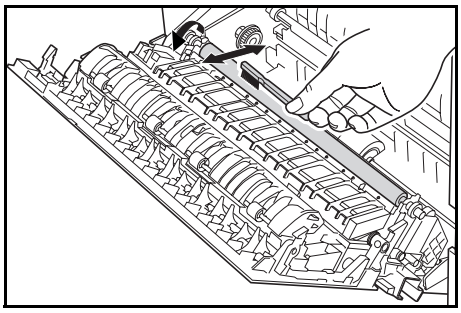

5 Close the front cover.

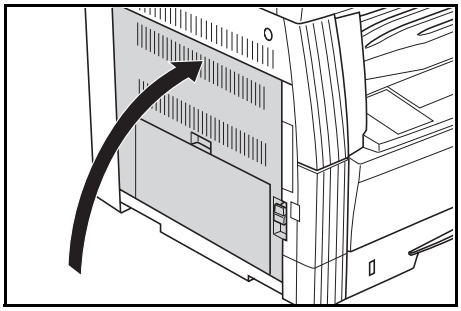

Replacing the Toner Container and Waste Toner Box

When the Add Toner Indicator on the Operation Panel lights up and the copier stops, replace the Toner. Replace the Waste Toner Box at the same time you replace the Toner Container.

* Replenish the Toner only when the Add Toner Indicator lights up or blinks.
* Whenever the Toner Container is changed, always carry out the procedures listed from Step 7 on P.9-5 through Step 11 on P.9-6. If any section is left dirty, the performance of the product cannot be maintained.

Inch specifications **Metric specifications**

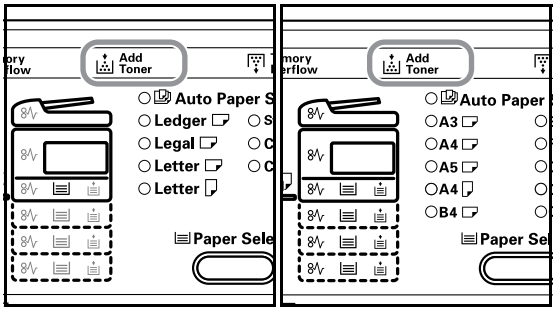

CAUTION

Do not attempt to incinerate the toner cartridge or waste toner box. Doing so will generate sparks and may lead to burns.

CAUTION

Do not try to force open or crush the toner container or waste toner box.

1 Open the front cover.

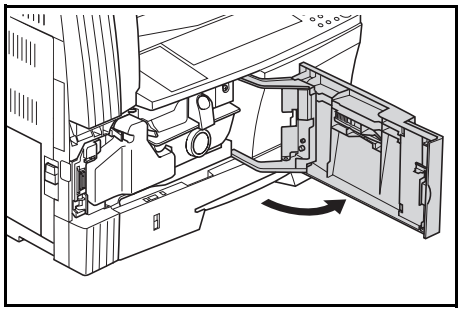

2 Push the Waste Toner Box holder to the left and remove the Waste Toner Box while pushing the holder.

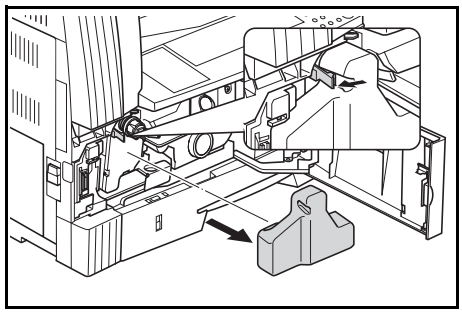

IMPORTANT!
Do not invert the old Waste Toner Box.

WARNING

The electrically charged section inside the main unit of the copier uses high voltage. Exercise caution in handling it to prevent electric shock.

3 Use the cap attached to the center of the old Waste Toner Box to cover the opening.

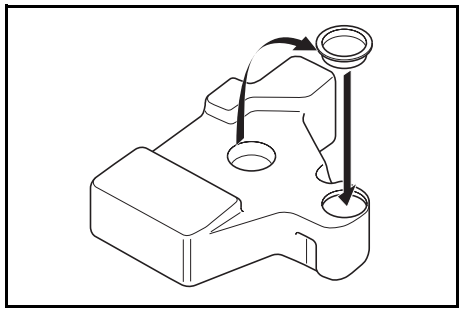

4 Set the new Toner Container in place, and turn Toner Container Release Lever **(1)** to the right.

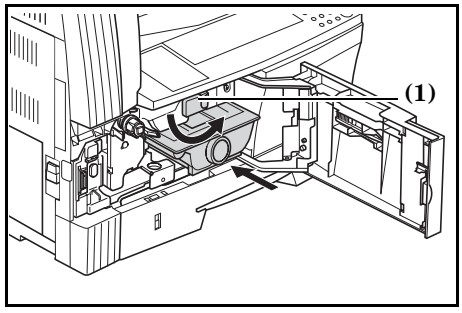

CAUTION

Do not attempt to incinerate the toner cartridge or waste toner box. Doing so will generate sparks and may lead to burns.

CAUTION

Do not try to force open or crush the toner container or waste toner box.

5 Place the old Waste Toner Box in the plastic bag provided for disposal.

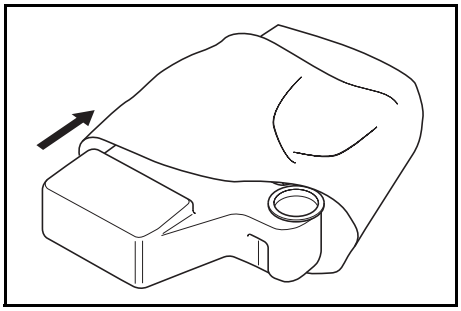

6 Place the old Toner Container in the plastic bag provided for disposal.

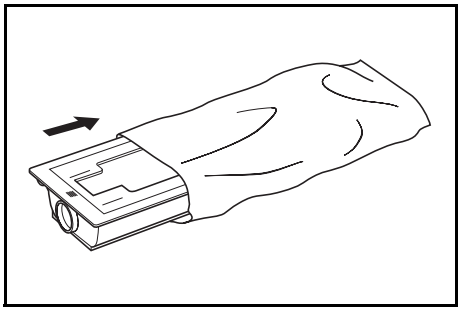

7 Grasp the Cleaning Rod and pull gently pull it out as far as it will go and then push it in again.
Repeat this operation several times.

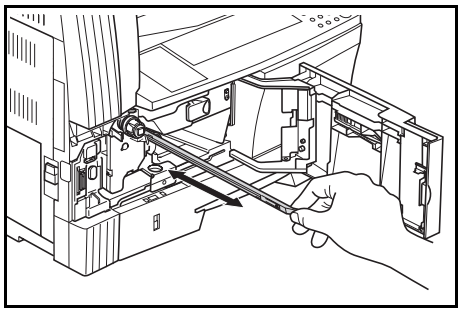

Note
Do not use excessive force to pull the rod or attempt to pull it out.

8 Remove the accompanying Grid Cleaner from its package and remove its cap.

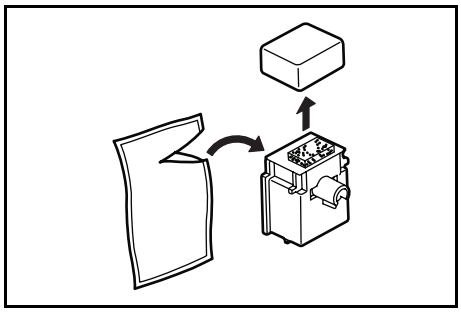

9 Match the Grid Cleaner to the notch and install it in the copier main unit.

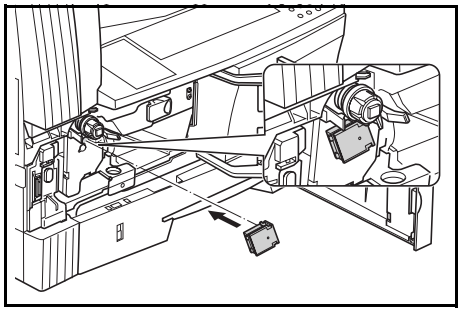

10 Pull the electrical charge section out as far as it will go and push it in after pulling it back and forth several times.

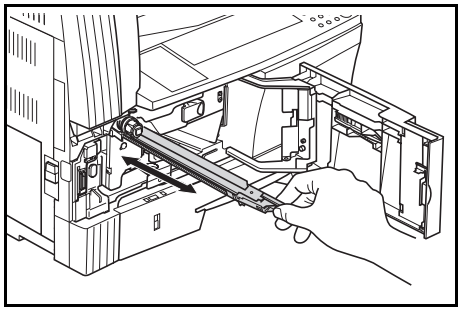

11 Remove the Grid Cleaner and close the cap.

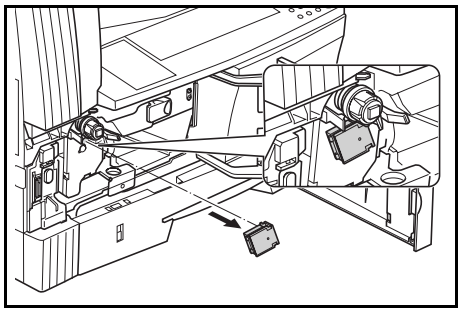

IMPORTANT!
After using the Grid Cleaner to clean the electrical charge section, it can be used again after more than 5 minutes have elapsed.

12 Tap on the upper part of the new toner container 5 or 6 times.

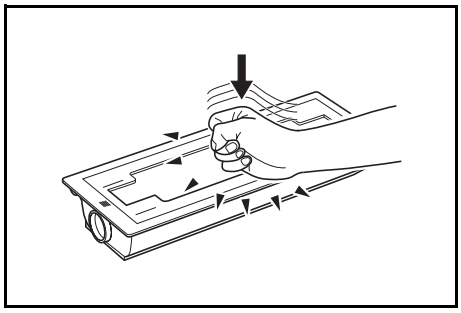

13 Shake the new Toner Container horizontally approximately 10 times to uniformly distribute the toner in it.

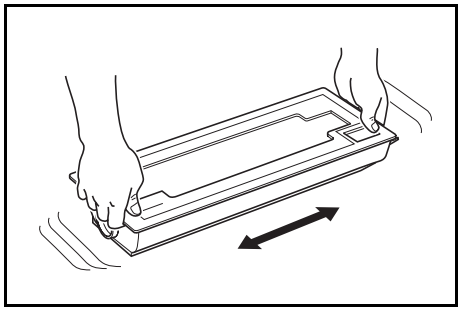

14 Turn Toner Container release lever **(1)** to the left and remove the Toner Container.

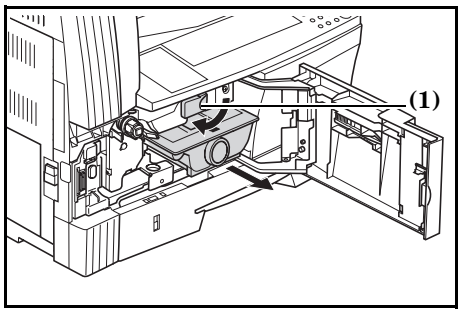

15 Install the new Waste Toner Box.

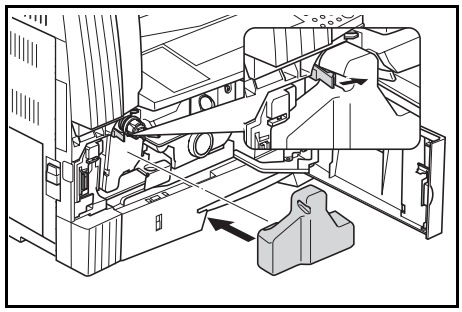

16 Close the front cover.

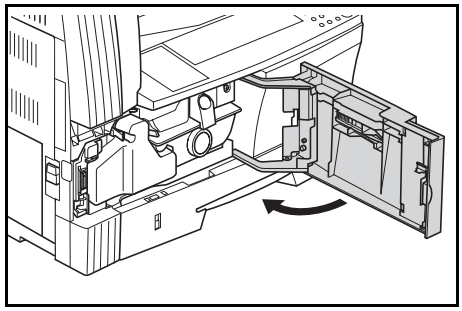

Return used toner containers and waste toner boxes to the dealer you purchased them from or to a sales representative. Recovered toner containers and waste toner boxes will be either reused, recycled or disposed of in accordance with the law.

Note
In order to ensure maximum copier performance, in addition to the cleaning done when changing the Toner Container, regularly (about 1 time per month) carry out Step 7 described in P.9-5 and Step 4 described in P.9-4.

Specifications

Main Body

Type	Desktop Type
Original Table	Fixed Original Table
Copy System	Indirect electrostatic system
Original Types Accommodated	Sheets, books and 3-dimensional objects (Maximum original size: 11" × 17"/A3)
Copy Sizes	11" × 17", 8 1/2" × 14", 11" × 8 1/2", 8 1/2" × 11", 5 1/2" × 8 1/2", Oficio II, A3, B4, A4, A4R, B5, B5R, A5R, B6R, A6R, Postcard and Folio Width that cannot be copied: 0.5 to 5.5 mm
Copying Speed	16-sheet copier: 1:1/Memory Copy 11" × 17"/A3:8 sheets/minute, 8 1/2" × 14"/B4:8 sheets/minute, 11" × 8 1/2"/A4:16 sheets/minute, 8 1/2" × 11"/A4R:13 sheets/minute, B5:16 sheets/minute, B5R:13 sheets/minute, A5R:10 sheets/minute, A6R:10 sheets/minute 20-sheet copier: 1:1/Memory Copy 11" × 17"/A3:10 sheets/minute, 8 1/2" × 14"/B4:11 sheets/minute, 11" × 8 1/2"/A4:20 sheets/minute, 8 1/2" × 11"/A4R:13 sheets/minute, B5:20 sheets/minute, B5R:13 sheets/minute, A5R:10 sheets/minute, A6R:10 sheets/minute
Warm-up Time	Less than 19.8 seconds (Room Temperature 68ºF/20ºC, Humidity 50%)
First Copy Time	Approximately 5.9 seconds (A4)
Copying Magnification	50 to 200% (1% increments) with variable and fixed magnifications.
Standard Memory	18MB bitmap memory. 14MB image storage memory.
Resolution	Reading: 600 × 600 dpi Writing: 600 × 600 dpi
Paper Supply System	Automatic Drawer Feed (Sheet storage: 300 sheets [80 g/m^2] and Multi-bypass Tray (Sheet storage: 50 sheets [80 g/m^2]
Acceptable Paper	<Paper Weights> Drawer: 64 to 105 g/m^2 Duplex Unit: 64 to 90 g/m^2 Multi-bypass Tray: 45 to 160 g/m^2 <Paper Types> Drawer: Regular paper, recycled paper and color paper Duplex Unit: Regular paper, recycled paper and color paper Multi-bypass Tray: Regular paper, recycled paper, color paper, thin paper and thick paper
Consecutive Copying	1 to 250 sheets
Light Source	Rare gas lamp
Developing System	Dry developing
Fixation System	Heat roller
Cleaning System	Blade cleaning system
Drum Type	OPC
Standard Functions and Modes	Automatic Paper Selection, Image Quality Selection, Automatic Magnification Selection Mode, Zoom Mode, 2-Sided Copy[1], Split Copy, Margin Shift, Border Width, Merge Copy, Sort Copy, Eco-copy, Copy Program and Department Management Mode 1...When the Duplex Unit (option) is installed.
Power Source	Inch specifications: 120V AC 60Hz 9.0A Metric specifications: 220-240V AC 50Hz 5.0A
Energy consumption efficiency	less than 25 Wh/h
Dimensions	Width 22 5/8" × Depth 21 3/4" × Height 19 3/4" Width 574 mm × Depth 552 mm × Height 502 mm
Weight	Approximately 85.9 lbs/39 kg
Noise emission	≦ 70dB (A)
Required Space	Width 32 9/16" × Depth 21 3/4" Width 827 mm × Depth 552 mm
Options	Document Processor, Paper Feeder, Duplex Unit, Key Counter, Key Card The Original Cover is standard depending on the destination.

(Specifications are subject to change without notice to reflect improvements in performance.)

Document Processor (option)

Original Feed System	Automatic feed system
Acceptable Types of Originals	Sheet originals
Original Sizes	Maximum: 11" × 17"/A3
	Minimum: 5 1/2" × 8 1/2"/A5R
Original Thickness (paper weight)	Single-side Originals: 45 to 160 g/m^2
	Double-sided Originals: 50 to 120 g/m^2
No. of Originals that can be loaded	Less than 50 sheets (50 to 80 g/m^2)
Power Source	Electrically connected to the copier main unit
External Dimensions	Width 21 3/4" × Depth 19 1/8" × Height 4 11/16"
	Width 552 mm × Depth 483 mm × Height 120 mm
Weight	Approximately 13.2 lbs/6 kg

(Specifications are subject to change without notice to reflect improvements in performance.)

Paper Feeder (option)

Paper Supply System	Automatic drawer feed (sheet storage 300 sheets [80 g/m^2])
Paper Sizes	11" × 17", 8 1/2" × 14", 11" × 8 1/2", 8 1/2" × 11", 5 1/2" × 8 1/2", Oficio II, A3, B4, A4, A4R, B5, B5R and A5R
Acceptable Paper	<Paper Weights>
	64 - 105 g/m^2
	<Paper Types>
	Regular paper, recycled paper and color paper
Power Source	Electrically connected to the copier main unit
Dimensions	Width 22 7/16" × Depth 21 3/16" × Height 5 5/16"
	Width 570 mm × Depth 538 mm × Height 135 mm
Weight	Approximately 15.4 lbs/7 kg

(Specifications are subject to change without notice to reflect improvements in performance.)

Duplex Unit (option)

System	Internal type
Paper Sizes	11" × 17", 8 1/2" × 14", 11" × 8 1/2", 8 1/2" × 11", 5 1/2" × 8 1/2", Folio, Oficio II, A3, B4, A4, A4R, B5, B5R and A5R
Acceptable Paper	<Paper Weights>
	64 - 90 g/m^2
	<Paper Types>
	Regular paper, recycled paper and color paper
Power Source	Electrically connected to the copier main unit
Dimensions	Width 14 1/2" × Depth 2 1/16" × Height 7 1/16"
	Width 368 mm × Depth 53 mm × Height 180 mm
Weight	Approximately 1.4 lbs/0.65 kg

(Specifications are subject to change without notice to reflect improvements in performance.)

Additional Memory (option)

Memory Type	100-pin DIMM
Memory Capacity	16MB, 32MB, 64MB and 128MB
No. of Originals that can be read in	16MB: 250 sheets, 32MB: 250 sheets, 64MB: 250 sheets, 128MB: 250 sheets (11" × 8 1/2", blackness ratio 6% originals)

(Specifications are subject to change without notice to reflect improvements in performance.)

Environmental Specifications

Power consumption

	[Inch specifications]	[Metric specifications]
	120V AC 60Hz	220-240V AC 50Hz
• During copying	less than 449 Wh	less than 365Wh
• During standby	less than 90 Wh	less than 88 Wh
• During the Low Power mode	less than 32 Wh	less than 31 Wh
• Recovery time from the Low Power mode	10 seconds	10 seconds
• During the Off and Sleep mode	less than 3.0 Wh	less than 3.3 Wh
• Transition time to the Low Power mode (at time of purchase)	15 minutes	15 minutes
• Transition time to the Off and Sleep modes (at time of purchase)	30 minutes	30 minutes
• Energy consumption ratio	less than 25 Wh/hr	less than 25 Wh/hr
• During the Plugged-In mode	less than 1 Wh	less than 1 Wh

* Power consumption in the Plugged-In mode can only be terminated by removing the power plug from the outlet.

2-Sided Copy Function

- Option

Paper Transportability

- Recycled paper made from 100% recycled pulp may be used with this product.

* Please consult with dealer or sales representative for information on the recommended types of paper, etc.

Optional Equipment

Installation locations for each optional device are explained.

Available Options

The following options are available for the copier.

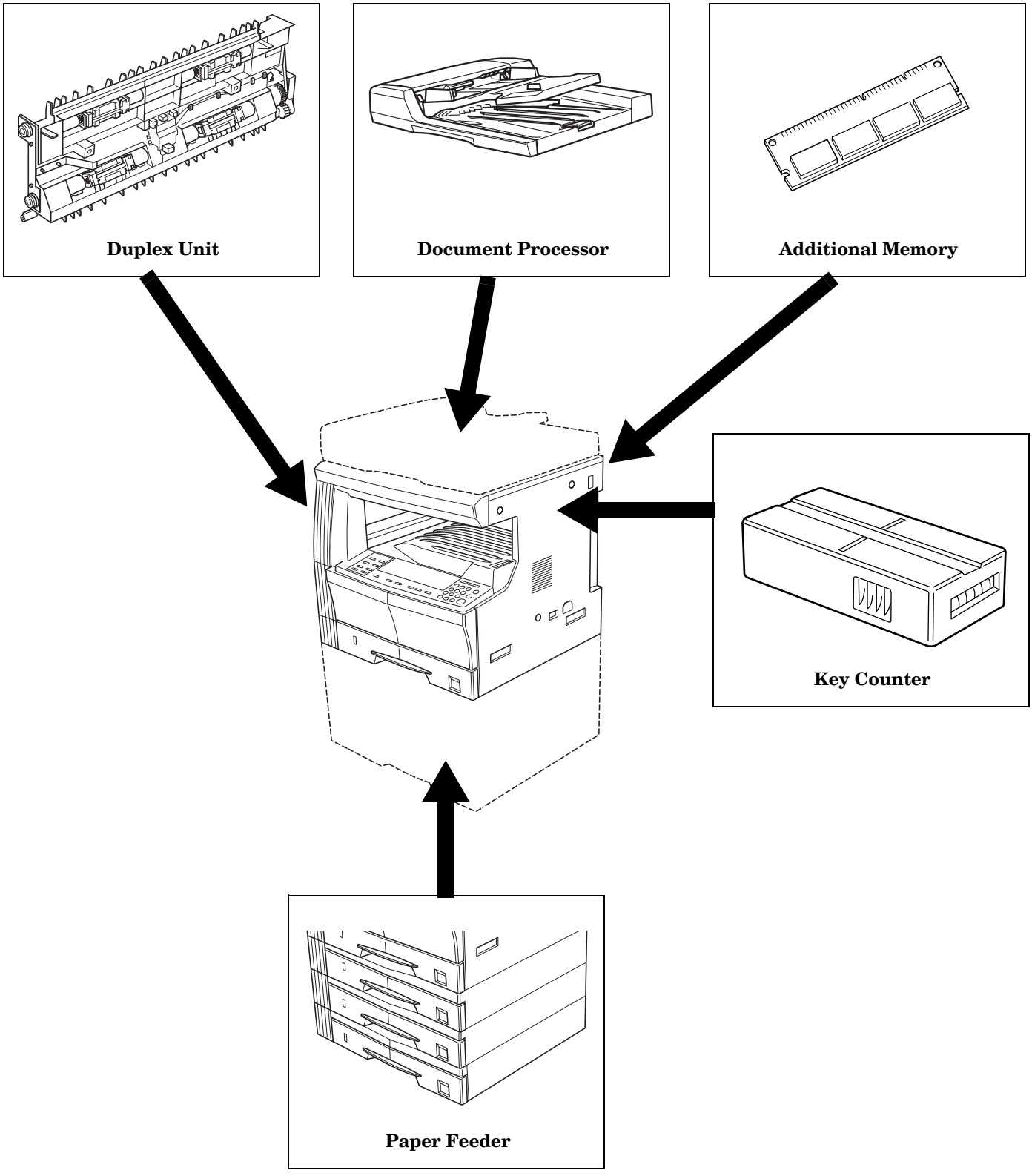

Document Processor

This device automatically feeds and scans multiple sheet originals one at a time. Up to 50 sheets can be set at a single time. It also can automatically turn over front and back originals and scan them in.

Paper Feeder

The number of drawer levels can be increased by 3 levels by placing the same type of drawer as that on the machine (300 sheet storage) under the standard drawer. The drawer is set in the same way as the standard drawer provided with the main unit.

Duplex Unit

2-Sided copies can be made when the Duplex Unit is installed.

Additional Memory

The maximum number of originals that can be read in can be increased with additional memory.

Key Counter

The Key Counter is used to confirm the amount of usage of the copier. It is useful in managing copier usage for each department, section, etc. as well as in the company overall.

Appendix: Functions and Settings Combination Chart

This copier has various functions, which if used together, can further increase copying efficiency. Refer to the chart below for function combinations.

The blank space can be combined as desired.
- =Cannot be combined.
DP: Document Processor

Secondary Priority
01 =Clears the prior setting and gives priority to the later setting.
02 =Switches the copier to Manual Exposure because the Photo Mode does not have Auto Exposure.
03 =Mixed Original Sizes automatically detects the original size and switches the copier to Automatic Paper Selection Mode.
04 =Switches the copier to automatic magnification when Combine/Merge Copy is set.
05 =This type of paper cannot be copied on both sides. The paper type will be given priority and 2-Sided Copy exited.
06 =Automatic Paper Selection is cleared and the copier switched to automatic magnification or manual mode.
07 =When a supply level other than A4, B5 or 8 1/2" × 11" is to be selected, select the A4, B5 or 8 1/2" × 11" paper size supply level.

Primary Priority
11 =Setting is not possible because the Photo Mode does not have Auto Exposure.
12 =Mixed Original Sizes has only Original Size Automatic Detection and Automatic Paper Selection.
13 =Single side → 2-Sided Copy and Mixed Original Sizes cannot be combined.
14 =Spread originals and Mixed Original Sizes cannot be combined.
15 =Border Erase and Mixed Original Sizes cannot be combined.
16 =Combine/Merge Copy and Mixed Original Sizes cannot be combined.
17 =Spread originals and Combine/Merge copies cannot be combined.
18 =Only automatic magnification is available for Combine/Merge copies.
19 =Paper Type and 2-Sided Copy cannot be combined.

Functions can be combined (conditions for combining exist)
21 =Irregular original sizes cannot be copied. (E14 is displayed)
22 =Vertically oriented originals and irregular original sizes cannot be copied. (E14 is displayed)
23 =Sizes other than 8 1/2" × 11", 11" × 17", A3R, A4R, A5R, B4R and B5R cannot be copied. (E14 is displayed).
24 =2-Sided Copies for paper sizes A6R, B6R, Postcard, Irregular Size or unspecified Multi-bypass Tray sizes where the paper size is irregular cannot be produced. (E15 is displayed).
25 =Selection is not possible when the paper size is other than A4, B5 or 8 1/2" × 11".

| Present Setting | | | Necessary Option | After Setting | | |

Index

Numerics

2 in 1 5-10
2-Sided copies 5-1
2-Sided Copy Reverse Side Rotation (Default Settings) 6-24
2-Sided Copy Reverse Side Rotation Setting 5-3
4 in 1 5-11
4 in 1 Layout Order 5-13
4 in 1 Layout Order (Default Settings) 6-26

A

Accompanying paper sheet 3-3
Additional Memory 7-4
Adjusting Copy Exposure 4-2
Alarm (Default Settings) 6-32
Auto-clear function 2-4
Auto Clear Setting (Default Settings) 6-29
Auto Clear Time (Default Settings) 6-30
Auto Drawer Switching (Default Settings) 6-20
Auto Exposure Adjustment (Default Settings) 6-14
Automatic Drawer Switching 2-5
Automatic Magnification Selection Mode 4-4
Automatic sorting of copy sets 5-15
Auto Off Mode 4-8
Auto Off Setting (Default Settings) 6-29
Auto Sizing (Default Settings) 6-21

B

Back ground Adjustment (Default Settings) 6-18
BASIC OPERATION 4-1
Book erase mode 5-8
Border Width (Default Settings) 6-26

C

Caution Labels 1-1
Cautions when handling consumables 1-4
Cautions when using the copier 1-3
Cleaning Rod 9-5
Cleaning the Copier 9-1
Cleaning the Original Cover 9-1
Cleaning the Platen 9-1
Cleaning the Separation Pawl 9-2
Cleaning the Slit Glass 9-1
Cleaning the Transfer Rollers 9-2
Clearing the Department Management Count 6-4
Completion of the Copying Procedure 4-3
COPIER MANAGEMENT 6-1
Copy Limit (Default Settings) 6-24
Copy Management Mode 6-1
Counter Report 6-34
Custom Size (1 to 2) (Default Settings) 6-23
Custom Sizes 2-4

D

Default Setting Items 6-7
Default Setting Mode 6-7
Default Settings Mode Operations Procedures 6-11
Deleting Department Codes 6-3
Department Code Registration 6-2
Department Management Code Operations Procedures 6-1
Document Processor 7-1
Drawer Paper Size (Drawers 1 to 4) (Default Settings) 6-21
Drawer Selection (Default Settings) 6-19
Drawer Size Detection 3-3
Duplex Unit 7-4

E

Eco-copy 5-17
Eco-copy (Default Settings) 6-13
Environment 1-2
Exposure Mode (Default Settings) 6-13
Exposure Steps (Default Settings) 6-14

F

Fitting the image of either two or four originals onto a single copy page 5-10
Functions and Settings Combination Chart 9-12

G

Grounding the copier 1-2

H

Handling of plastic bags 1-2
How to set the Department Management Mode 6-5

I

If one of the following indications is Displayed 8-1
If other trouble occurs 8-8
If papaer jams 8-3
Image Quality Selection 4-2
Inputting Custom Sizes 3-6
Interrupt Copying 4-6

K

Key Counter 7-4

L

Loading into a Drawer 3-1
Loading Paper 3-1
Low Power Mode 4-7
Low Power Mode Transition Time (Default Settings) 6-31

M

MAINTENANCE AND OPERATION 9-1
Making copies when the copier is in the Department Management Mode 6-6
Making copies with clean edges 5-8
Making enlarged and reduced copies 4-4
Margin Shift (Default Settings) 6-25
Merge Copy Borderline (Default Settings) 6-27
Mixed Original Sizes (Auto Selection) Mode 7-3
Multi-bypass tray Paper Size (Default Settings) 6-22
Multi-bypass tray Size Input 3-5

N

NAMES OF PARTS 2-1
Notes on acceptable documents (Document Processor) 7-1

O

Off Mode Transition Time (Default Settings) 6-31
Optional Equipment 9-10
OPTIONAL EQUIPMENT (Document Processor) 7-1
Original Image Quality (Default Settings) 6-12
Originals that can be used with the Document Processor (Document Processor) 7-1
Outputting the Department Management List 6-5

P

Page Separation/Split Copy Modes 5-4
Paper Feeder 7-4
Paper misfeed in the Document Processor (option) 8-5
Paper misfeed in the drawer 8-3
Paper misfeed in the Left Cover internal section 8-4
Paper misfeed in the Multi-bypass tray 8-4
Paper misfeed in the optional drawer 8-6
Paper misfeed in the paper supply section 8-3
Paper Selection 4-1
Photo Exposure Adjustment (Default Settings) 6-16
Photo Mode 4-2
Photo Processing (Default Settings) 6-18
Power Supply 1-2
PRECAUTIONS FOR USE 1-3
Procedure for Changing the Default Settings 6-11
Processing to Reduce Black Line (Default Settings) 6-17
Program Function 5-18

R

Registering a program 5-18
Rotate Sort Setting (Default Settings) 6-28

S

Saving on toner use 5-17
Section Names (Document Processor) 7-1
Selected Drawer (Default Settings) 6-20
Selecting Functions 4-1
Setting Originals in the Document Processor 7-2
Setting paper on the multi-bypass tray 3-4
Setting the Border Width 5-8
Setting the Key Counter 7-4
Setting the Margin 5-6
Setting the Merge Copy Border Lines 5-13
Setting the Number of Copies 4-2
Setting the Original 4-1
Setting the Original on the Platen (Document Processor) 7-3
Sheet erase mode 5-8
Silent Mode Transition Time (Default Settings) 6-28
Sorting 5-15
Specifications 9-7
Standard Margin 5-6
Start Copying 4-2

T

Text & Photo Mode 4-2
Text & Photo Mode Exposure Adjustment (Default Settings) ...6-15
Text Adjustment Exposure (Default Settings) 6-16
Text Mode 4-2
Toner 1-4
Toner Container 9-4
Toner Container release lever 9-6
Toner Coverage Report (Default Settings) 6-33
Total Counter 6-34

U

User Status Report (Default Settings) 6-11
Using programmed setting to make copies 5-18

W

Warm-up 4-1
Waste Toner Box 9-4

Z

Zoom Mode 4-4

For best copy results and machine performance, we recommend that you use only KYOCERA MITA original supplies for your KYOCERA MITA copier.

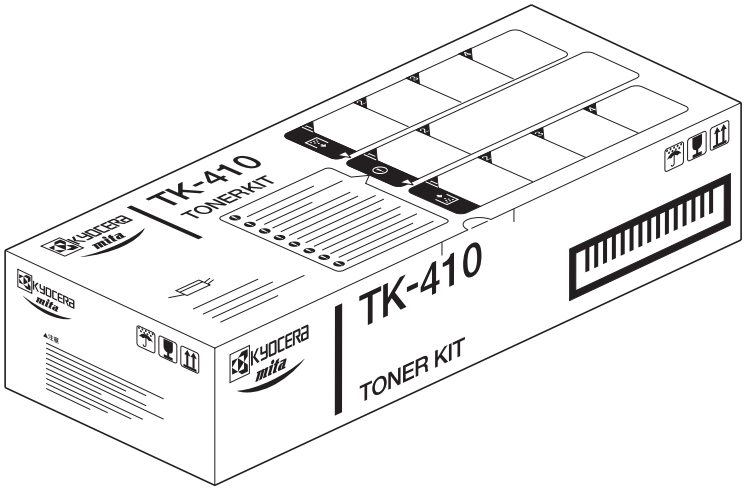

QUALITY CERTIFICATE

This machine has passed all quality controls and final inspection

KYOCERA MITA EUROPE B.V.

Hoeksteen 40, 2132 MS Hoofddorp,
The Netherlands
Phone: +31.(0)20.654.000
Home page: http://www.kyoceramita-europe.com
Email: info@kyoceramita-europe.com

KYOCERA MITA NEDERLAND B.V.

Hoeksteen 40 2132 MS Hoofddorp
The Netherlands
Phone: +31.(0)20.587.7200

KYOCERA MITA (UK) LTD.

8 Beacontree Plaza
Gillette Way,
Reading Berks RG2 0BS, UK
Phone: +44.(0)118.931.1500

KYOCERA MITA ITALIA S.P.A.

Via Verdi 89 / 91 20063 Cernusco sul Naviglio,
Italy
Phone: +39.02.92179.1

S.A. KYOCERA MITA BELGIUM N.V.

Hermesstraat 8A 1930 Zaventem Belgium
Phone: +32.(0)2.720.9270

KYOCERA MITA FRANCE S.A.

Parc Les Algorlthmes
Saint Aubin
91194 GIF-SUR-YVETTE
France
Phone: +33.(0)1.6985.2600

KYOCERA MITA ESPAÑA S.A.

Edificio Kyocera, Avda de Manacor N. 2,
Urb. Parque Rozas 28290 Las Rozas,
Madrid, Spain
Phone: +34.(0)91.631.8392

KYOCERA MITA FINLAND OY

Kirvesmiehenkatu 4 00810 Helsinki,
Finland
Phone: +358.(0)9.4780.5200

KYOCERA MITA (SCHWEIZ) AG

Holzliwisen Industriestrasse 28
8604 Volketswil, Switzerland
Phone: +41.(0)1.908.4949

KYOCERA MITA DEUTSCHLAND GMBH

Mollsfeld 12 D-40670 Meerbusch,
Germany
Phone: +49.(0)2159.918.0

KYOCERA MITA GMBH AUSTRIA

Eduard-Kittenberger Gasse 95
1230 Wien, Austria
Phone: +43.(0)1.86338.0

KYOCERA MITA SVENSKA AB

Box 1402 171 27 Solna, Sweden
Phone: +46.(0)8.546.550.00

KYOCERA MITA NORGE

Postboks 150 Oppsal, NO 0619 Oslo
Olaf Helsetsvei 6, NO 0694 Oslo
Phone: +47.(0)22.62.73.00

KYOCERA MITA DANMARK A/S

Hovedkontor: Slotsmarken 11,
DK-2970 Hørsholm, Denmark
Phone: +45.(70)22.3880

KYOCERA MITA PORTUGAL LDA.

Rua do Centro Cultural, no 41 1700-106
Lisbon, Portugal
Phone: +351.(0)21.842.9100

KYOCERA MITA SOUTH AFRICA (PTY) LTD.

527 Kyalami Boulevard,
Kyalami Business Park 1685 Midrand South
Phone: +27.(0)11.466.3290

KYOCERA MITA AMERICA, INC.

Headquarters:
225 Sand Road,
Fairfield, New Jersey 07004-0008,
U.S.A.
Phone: (973) 808-8444

KYOCERA MITA AUSTRALIA PTY. LTD.

Level 3, 6-10 Talavera Road, North Ryde,
N.S.W. 2113 Australia
Phone: (02) 9888-9999

KYOCERA MITA NEW ZEALAND LTD.

1-3 Parkhead Place, Albany
P.O. Box 302 125 NHPC,Auckland,
New Zealand
Phone: (09) 415-4517

KYOCERA MITA (THAILAND) CORP., LTD.

9/209 Ratchada-Prachachem Road,
Bang Sue, Bangkok 10800, Thailand
Phone: (02) 586-0320

KYOCERA MITA SINGAPORE PTE LTD.

121 Genting Lane, 3rd Level,
Singapore 349572
Phone: 67418733

KYOCERA MITA HONG KONG LIMITED

11/F., Mita Centre,
552-566, Castle Peak Road,
Tsuen Wan, New Territories,
Hong Kong
Phone: 24297422

KYOCERA MITA TAIWAN Corporation.

7F-1~2, No.41, Lane 221, Gangchi Rd.
Neihu District, Taipei, Taiwan, 114. R.O.C.
Phone: (02) 87511560

KYOCERA MITA Corporation

2-28, 1-chome, Tamatsukuri, Chuo-ku
Osaka 540-8585, Japan
Phone: (06) 6764-3555
http://www.kyoceramita.com

©2003 KYOCERA MITA Corporation

KYOCERA is a trademark of Kyocera Corporation

2004. 3
2FX80031B