Operating instructions

MVVS 80 IRS No: 3007L
MVVS 80 IRS SP No: 3007SP

Version 1.1

Before using the engine, please read these instructions carefully.

Congratulations on choosing the gas engine MVVS 80.
MVVS 80 has been designed and manufactured for propeller-powered radio-controlled model planes. It is able to meet all of your expectations of an acrobatic racing engine.

Technical specifications

Bore	**48 mm**	RpM range	**1000 – 7000 RpM**
Stroke	**44 mm**		
Weight of complete engine without ignition*	**2220 g**	Fuel	**Unleaded 95-octane fuel**
Weight of ignition unit	**190 g**	Lubrication	**Oil with petrol in mixture 1:40**

Safety precautions:

1) Never use the engine for any manned vehicles.
2) When operating model planes, always follow the rules and laws in effect in your country.
3) The manufacturer declines all responsibility for all damages arising from the operation of models and other appliances droved by MVVS 80 engine.
4) Always use original spare parts.
5) Never tamper with the engine construction.
6) Before each flight check that all the propeller screws are tightened up and in good condition. If you use a spinner, check that it is tightened up, too. When mounting the spinner always follow the assembly instructions.
7) Periodically check that the engine is firmly fixed to the engine mounts. Never start a loose engine!
8) Always use a balanced propeller! Always replace the propeller when damaged!
9) Make sure that no part of your body intersects the plane of the spinning propeller.
10) Always wear close-fitting, well-fastened clothes when starting or operating the running engine. Never wear loosely hanging clothes (ties, scarf, etc.).
11) Never try to stop the engine by any part of your body.
12) Always stop the engine either by turning off the ignition switch or by completely closing the carburetor throttle valve.
13) Before starting the engine always make sure that the model is safely fixed in place and cannot start moving.
14) Fuel is combustible and therefore must be kept in an enclosed container at a safe distance from the engine when it is running.
15) When preparing fuel carefully follow the manufacturer's or dealer's instructions.
16) Small objects must be kept at a safe distance from the engine when it is running. Never throw any objects towards the spinning propeller.
17) Be careful in choosing the location where you wish to start the engine. Avoid dusty or sandy areas.
18) Start the engine in well-ventilated areas only. Never start the engine indoors.
19) When starting the engine make sure that bystanders, especially children, are at a safe distance of at least 10 m.
20) The engine power output makes it possible to fly big models. Mal-operation of such models may cause serious damage. Start using the MVVS 80 in model planes only after you have mastered operating smaller models.

Selecting a suitable propeller

It is usually the case that propellers of the same dimensions coming from different manufacturers are not the same. Oftentimes not even propellers of the same dimensions produced by a same manufacturer are not the same. The engine power is best utilized when the propeller dynamics curve and engine power curve (revolutions / power output) intersect in the area of the engine top power output. Unfortunately, no propeller manufacturer provides this information. Engine power output is also a variable quality. It depends above all on the silencer used and can considerably vary. The situation is further complicated by environmental parameters (temperature and atmospheric pressure in particular): low temperature and high pressure increase propellers' input requirements by 20% in comparison with input at hot weather.

At the latest after 200 hours let the engine check by authorized service.

MVVS 80 has been designed to generate maximum power at 6000 – 6500 RpM, according to the type of exhaust used. If you wish to utilize the maximum power output, choose a propeller, which allow the engine to reach these revolutions, or slightly lower revolutions (given the unloading of the propeller depending on the speed of flight) on the ground.
We do not recommend using propellers with which the engine reaches more than 7000 RpM on the ground.

Lubrication the engine´s front bearing:
Inject 1.5ml of oil for engines to the hole as on the picture.
During the lubrication DO NOT turn with the propeller!
NOTE! After the bearing lubrication the engine can produce more smoke!
Do not forget to apply the screw-cap into the hole. Running engine without can cause engine´s damage!!!

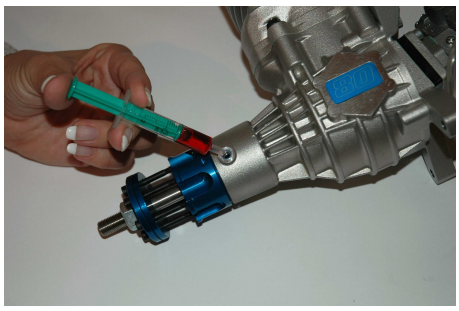

Suggested propeller dimensions:

two-blade propellers:
25x10 – 14
26x10 – 14
27x10 – 12

three-blade propellers:
24x10 – 12
25x10 – 12

These values are only approximate and may vary with the factors described in the previous section, as well as with the type of the exhaust system used.

Fuel

Strictly use unleaded 95-octane petrol mixed in the proportion 40 volume units of petrol to 1 unit of Mobil Racing 2T oil. If necessary, **quality brand-name synthetic oil intended for racing two-stroke engines** can be used too.
Running the engine in, use MVVS Racing 2T oil, which come with the engine. Mix it in the proportion 30:1.
Never use inexpensive oil developed for garden appliances or synthetic oils intended for the operation of methanol model engines. The manufacturer declines all responsibility for all engine damages arising from the use of low-quality fuel.

Assembly

The engine is fastened in place with four holders built in the rear cover. The rear cover is adjustable by 90° which ensure easy access to the carburetor's operating elements. The engine can be mounted directly to the firewall or an assembly kit can be used (special accessories). Use M6 screws or screws M4 with a reduction kit (special accessories). If you decide to fasten the engine using flexible motor mounts, always choose parts with enough solidity and strength. Make sure to secure the screws against loosening and regularly check that they are tightened up and in good condition.

Since air is used to cool the engine, sufficient air circulation under the cowl must be ensured. Never forget about a hot air outlet – which must be bigger than the intake. Gas engines heat up to a much greater degree than methanol ones!

Do not forget that the engine needs oxygen from the air to be able to operate. Therefore ensure access of air to the engine intake as well. Caution: intake of warm air from beneath the cowl may cut the engine power output.

Note: Attach a hose to the airpressure inlet on the carburetor and terminate it outside the cowl.

Caution! When mounting the engine in the model use seals to protect all openings and prevent the pollution of the engine's inside with sawdust, residual abrasives etc.

Exhaust

Use only factory-made exhausts pipes designed for this type of engine, preferably brand-name MVVS engines with which you also get the power output guaranteed.
The manufacturer declines all responsibility for all engine damages arising from the use of improper exhaust systems.
When mounting the exhaust follow the manufacturer's instructions. Make sure to secure sufficient cooling of the exhaust.

Carburetor adjustment

Basic setting: adjusting needle (L) for low revolutions range 1 turn and 45 min
adjusting needle (H) for high revolutions range 1 turn and 10 min
(the values are derived from the position of clock-hands; the starting point is needle fully screwed in)

Caution! Never tight the adjusting needles by force. You can damage the touching flats for the needles. In this way damaged parts cause the carburetor is not possible to adjust and it is necessary to exchange new carburetor.

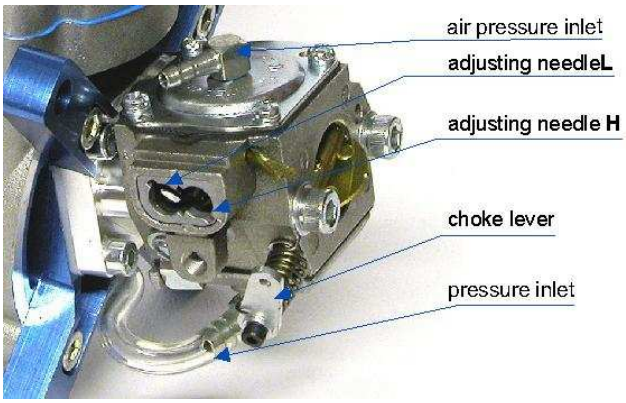

The new engine comes adjusted to the basic setting. This setting should be kept during running the engine in!

After the engine has been run in, adjust it following the instructions below:
- start the engine and warm it up
- let the engine run at idle speed for approx. 5 seconds

If the engine starts to run backwards do not open the throttle - stop the engine immediately! Otherwise the engine can be damaged!

Step I

- Accelerate to 2/3 of the throttle range within approx. 1 sec (faster acceleration). Repeat three times – if the engine accelerates quickly and without a hiccup go to Step III. If acceleration is not smooth go on to Step II.

Step II

- Faulty acceleration with hiccups and a tendency to cut out is usually attributable to a poor fuel mixture in the medium-revolutions range. Stop the engine and recheck the fuel feed (the hose-pipe must not be pinched or broken; if fitted, check also the fuel filter permeability). Restart the engine and test acceleration again. If problems persist adjust the carburetor. Open the adjusting needle L by 5 min and retest acceleration. If acceleration is smooth, open the needle by another 3-5 min - this should be done because the needle was previously set at a boundary value; if atmospheric conditions changed during flight, the problems might recur.
- If the engine still has bad acceleration, open the needle by 10 min. If the engine's operation does not improve afterwards, stop it and check the basic setting. Set the adjusting needle L at 1 turn and 50 min and the adjusting needle H at 1 turn and 10 min. Restart the engine again and test acceleration. If the engine runs correctly go to Step III. If engine does not accelerate properly, open the needle by another 10 min. If it does not accelerate, the defect supposed to be elsewhere than in incorrect adjustment. In this case go to the section on problem solving.

Step III

- If the engine accelerates correctly, according to the above test, set it at idle speed and accelerate to full speed. Repeat twice more. If the engine functions correctly, go to Step IV. If it cuts out, open the L needle by 5-10 min more.
- If the engine does not respond to acceleration fast enough keep closing the L needle until the engine starts to cut out in response to gas. At that point reopen the L nozzle by 5-10 min.

Step IV

- If the engine reacts correctly set it at full speed. If revolutions do not drop, the engine has been adjusted successfully. If revolutions seem to drop, open the adjusting needle H by approx. 5-10 min.

Caution!!! The engine must be stopped while you adjust the carburetor in order to prevent injury by the propeller.
Caution!!! Never close the choke valve completely when the engine is operating!

The choke valve is set to allow minimum air flow only when fully closed, which could cause damage to the intake reed valve.

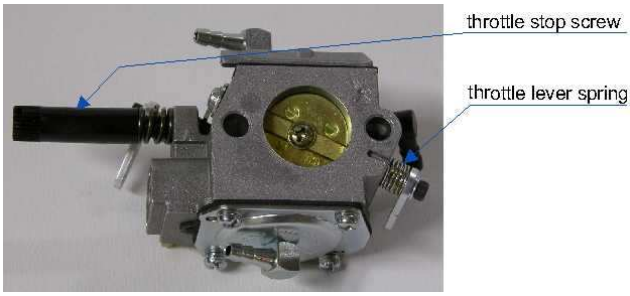

Depending from the throttle control used there is possibility to use throttle stop-screw and the throttle valve spring enclosed.
If the throttle pull rod is not equipped with flexible element the montage of the throttle valve spring is recommended. Otherwise the vibrations of the engine can cause excessive wear of the throttle valve shafting and with this deteriorate the carburetor function.

Adjusting carburetor position:

You can turn the rear cover by 90° which makes it possible to adjust the carburetor's position (especially its adjusting needles) when fixing it in the model.

How to dismantle the rear cover:

Unscrew two M5 screws that hold the carburetor in place, remove the pressure hose from the carburetor (mind the gasket under the carburetor), remove the carburetor and loosen four M5 screws along the crankcase (Caution! Do not loosen the M4 screws that fix the reed-valve to the rear cover).
Remove the rear cover by pulling it out of the crankcase – never use a hammer or any other similar tool. The rear cover is sealed in the crankcase with two sealing rings – therefore more strength is needed, however, it must always be pull only!
Make sure you disassemble the engine in a clean environment!
Position the rear cover as desired, carefully insert it in the crankcase and tighten the screws. Do not forget insert the gasket when reassembling the carburetor.

Starting and running in a new engine

Before you first start the engine, make sure that the plug is screwed in and tightened up and that the plug socket is fitted in place and fastened down properly.
Fix the ignition sensor in proper position above the magnet with screws enclosed.

Unless the spark plug is not inserted in plug socket, never turn the engine with ignition turned on.
This could lead to ignition damage!

1) Make sure that the ignition is switched off, the choke valve is closed and the throttle valve is about half opened. Then give the engine 3-4 turns, provided that carburetor is not overflowing. If it is overflowing, only give the engine 1-2 turns.

2) Switch the ignition on, open the choke valve, set the throttle at slightly higher idle speed and give the engine a few quickly turns. If even after the fourth turn, with the choke valve closed, you do not hear a suggestion of the engine starting, give the engine 2 turns following the instructions in paragraph 1 above. Then proceed according to instructions given in paragraph 2.

3) If the engine does not start even after another set of turns open the throttle to maximum and give the engine approx. 4 turns. Switch the ignition off and on again and restart the engine with throttle turned slightly down and the choke valve set open.

4) If the engine still would not start, unscrew the plug and check its contacts. Clean any possible petrol moisture (i.e. an indication of engine overflow) and screw it in again. Further starting should only be done with the throttle turned down. If the plug is dry then probably not enough fuel has been drawn into the carburetor. If that is the case, check the fuel feed and then return to the instructions given in paragraph 1.

If the engine starts to run backwards do not open the throttle - stop the engine immediately! Otherwise the engine can be damaged!

Having started the engine, leave it running for approx. 2 min at a higher idle speed. Then run it in for approx. 20 min, while changing revolutions from idle to 1/2-3/4 of the range and shortly holding each position - gradually prolong the holding periods. After 10 minutes of operation start opening the throttle at maximum for short periods of time. Stop the engine and let it cool down. Then restart it and check the adjustment. If everything is all right, you can first take off. During first few flights do not overload the engine and do not let it run at high revolutions for long periods of time (very important at hot weather). Use up all fuel that was produced as a mixture with the oil that is included in the package. From now on, fuel and oil should be mixed in the proportion 40:1.

DO NOT PROCESS THE RUNNING-IN AT IDLE SPEED!

Problem guide

The engine would not start:

- check and possibly replace the spark plug (check the spark by inserting the plug into the plug socket and turning the engine)
- check the fuel feed
- turn the engine to check its mechanical condition
- check whether the carburetor nozzles are adjusted correctly
- take the carburetor off and visually examine the condition of the carbon-fiber reed valve
- unscrew the carburetor cover on the side of the pressure inlet, check the fuel screen possibly give the carburetor a blow with a current of air; when reassembling, make sure you arrange the membrane and gasket in a correct order
- recheck the pressure hose attached to the carburetor

Replacing the reed valve:

- unscrew and remove the carburetor (mind the gasket)
- unscrew four M4 screws on the flange, remove the flange and take off the reed valve (mind the gasket)
- unscrew four M2 screws and remove the old valves, replace them with new ones, screw the screws back in and tighten them gently
- when reassembling, make sure you fix the gasket correctly

Mechanical faults of the engine:

- turning the engine is not possible: likely cause – the piston in the cylinder got seized: loosen and unscrew the M5 nuts under the cylinder (to loose the nuts use exclusively a special wrench which you can order as an accessory)
- carefully remove the cylinder
- you will probably be able to find out the likely cause of the engine's mechanical problem by visually examining the piston and crankcase.
- **mechanical repairs must always be commit to an authorized service department**

Service information

After each 3 running hours or every 15th flight do lubricate the front bearing. The new engine lubricate EARLIEST after first 10 running hours!

After each 20 hours of running change the spark plug and check the read valve.

After each 40 hours of operation time preventively exchange the read valve for new and check the crankshaft bearings, connecting rod, check how much is used the piston and piston ring. If needed change parts or commit the engine to authorized service.

Warranty

The MVVS gas engines come with a three-year guarantee against defects in workmanship and materials. Only original buyers of the engines are eligible warranty claimants. The warranty cannot be transferred with a change in ownership.

This guarantee does not cover:

- any normal wear that might occur
- damage arising from accidents
- damage arising from the use of an unbalanced or damaged propeller
- damage arising from the use of a too small or a too big propeller
- damage arising from the use of low-quality fuel
- damage arising from the use of other than original spare parts and accessories
- damage arising from sucking a foreign object into the engine
- damage arising from any improper use

For further questions, please contact:

MVVS, spol. s r.o., tr. Kpt. Jarose 35, 602 00 Brno, Czech Republic
Tel. +420 545 211 683, fax: +420 545 211 418
E – mail: mvvs@mvvs.cz
Web: www.mvvs.cz

Spare Parts List

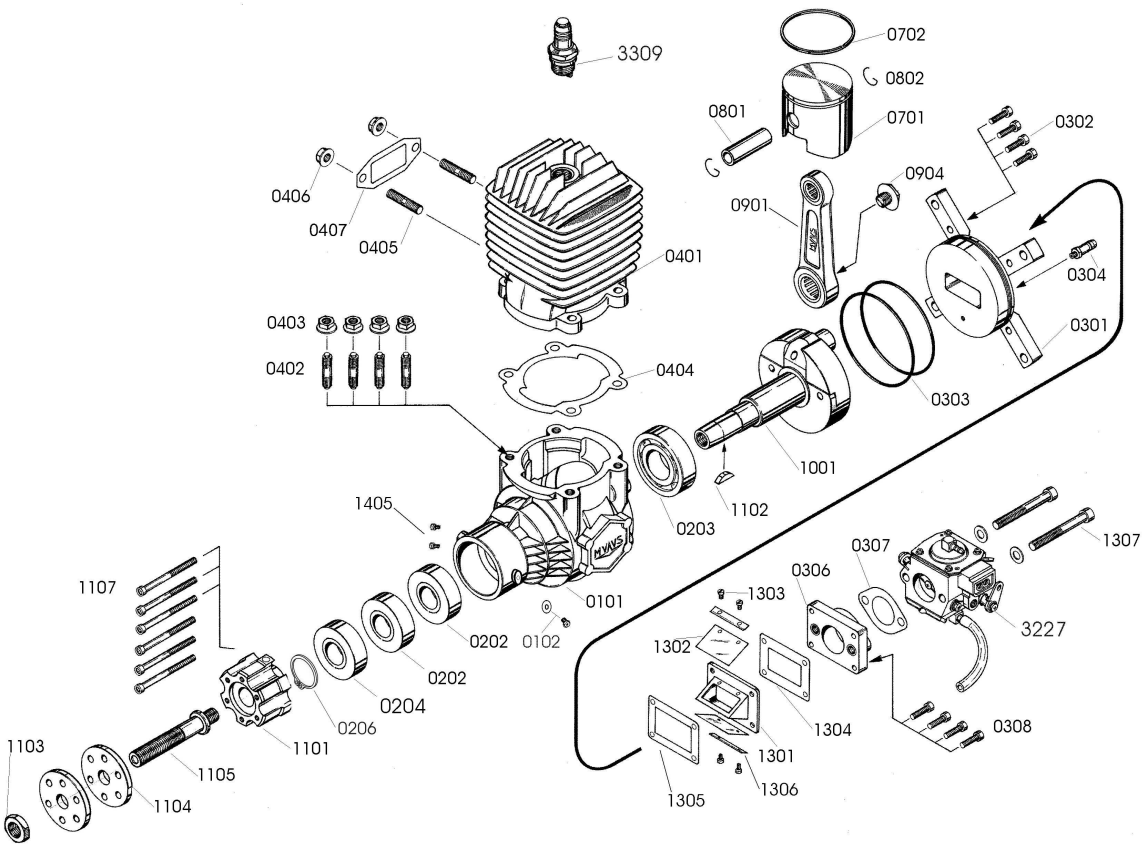

Nr.:	Description:		Nr.:	Description:
0101	Crankcase		0802	Piston pin retainer
0102	Screw-cap		0904	Connecting rod washer
0202	Front bearing 2x		0951	Connecting rod
0203	Rear bearing		1001	Crankshaft
0204	Packing		1101	Drive washer
0206	Crankshaft retaining ring		1102	Drive washer key
0301	Rear cover		1103	Propeller nut
0302	Rear cover screws-set		1104	Propeller washer
0303	Rear cover „O“- ring		1105	Propeller screw
0304	Pressure nipple		1107	Propeller screws - set
0306	Carburetor flange		1301	Reed valve case
0307	Carb. flange gasket		1302	Reed valve
0308	Carb. flange screws - set		1303	Reed valve screws
0401	Cylinder		1304	Reed valve gasket-upper
0402	Cylinder screws - set		1305	Reed valve gasket-bottom
0403	Cylinder nut		1306	Reed valve strap
0404	Cylinder gasket		1307	Carburetor screws
0405	Exhaust screws - set		1405	Ignition sensor fixing screws
0406	Exhaust nut			
0407	Exhaust flange gasket		3227	Carburetor
0701	Piston		3309	Spark plug
0702	Piston ring		3314L	Electronic ignition unit (3007L)
0801	Piston pin		3314S	Electronic ignition unit (3007SP)